Using the Avaya A175 Desktop Video Device with the Avaya Flare™ Experience

16-603733
Issue 1
December 2010

© 2011 Avaya Inc.

All Rights Reserved.

Notice

While reasonable efforts have been made to ensure that the information in this document is complete and accurate at the time of printing, Avaya assumes no liability for any errors. Avaya reserves the right to make changes and corrections to the information in this document without the obligation to notify any person or organization of such changes.

Full legal page information

For full support, please see the complete document, *Avaya Support Notices for Hardware Documentation*, document number 03–600759.

To locate this document on our Web site, simply go to http://www.avaya.com/support and search for the document number in the search box.

Documentation disclaimer

"Documentation" means information published by Avaya in varying mediums which may include product information, operating instructions and performance specifications that Avaya generally makes available to users of its products. Documentation does not include marketing materials. Avaya shall not be responsible for any modifications, additions, or deletions to the original published version of documentation unless such modifications, additions, or deletions were performed by Avaya. End User agrees to indemnify and hold harmless Avaya, Avaya's agents, servants and employees against all claims, lawsuits, demands and judgments arising out of, or in connection with, subsequent modifications, additions or deletions to this documentation, to the extent made by End User.

Link disclaimer

Avaya is not responsible for the contents or reliability of any linked Web sites referenced within this site or documentation provided by Avaya. Avaya is not responsible for the accuracy of any information, statement or content provided on these sites and does not necessarily endorse the products, services, or information described or offered within them. Avaya does not guarantee that these links will work all the time and has no control over the availability of the linked pages.

Warranty

Avaya provides a limited warranty on its Hardware and Software ("Product(s)"). Refer to your sales agreement to establish the terms of the limited warranty. In addition, Avaya's standard warranty language, as well as information regarding support for this Product while under warranty is available to Avaya customers and other parties through the Avaya Support Web site: http://support.avaya.com. Please note that if you acquired the Product(s) from an authorized Avaya reseller outside of the United States and Canada, the warranty is provided to you by said Avaya reseller and not by Avaya.

Licenses

THE SOFTWARE LICENSE TERMS AVAILABLE ON THE AVAYA WEBSITE, HTTP://SUPPORT.AVAYA.COM/LICENSEINFO/ ARE APPLICABLE TO ANYONE WHO DOWNLOADS, USES AND/OR INSTALLS AVAYA SOFTWARE, PURCHASED FROM AVAYA INC., ANY AVAYA AFFILIATE, OR AN AUTHORIZED AVAYA RESELLER (AS APPLICABLE) UNDER A COMMERCIAL AGREEMENT WITH AVAYA OR AN AUTHORIZED AVAYA RESELLER. UNLESS OTHERWISE AGREED TO BY AVAYA IN WRITING, AVAYA DOES NOT EXTEND THIS LICENSE IF THE SOFTWARE WAS OBTAINED FROM ANYONE OTHER THAN AVAYA, AN AVAYA AFFILIATE OR AN AVAYA AUTHORIZED RESELLER; AVAYA RESERVES THE RIGHT TO TAKE LEGAL ACTION AGAINST YOU AND ANYONE ELSE USING OR SELLING THE SOFTWARE WITHOUT A LICENSE. BY INSTALLING, DOWNLOADING OR USING THE SOFTWARE, OR AUTHORIZING OTHERS TO DO SO, YOU, ON BEHALF OF YOURSELF AND THE ENTITY FOR WHOM YOU ARE INSTALLING, DOWNLOADING OR USING THE SOFTWARE (HEREINAFTER REFERRED TO INTERCHANGEABLY AS "YOU" AND "END USER"), AGREE TO THESE TERMS AND CONDITIONS AND CREATE A BINDING CONTRACT BETWEEN YOU AND AVAYA INC. OR THE APPLICABLE AVAYA AFFILIATE ("AVAYA").

Avaya grants End User a license within the scope of the license types described below. The applicable number of licenses and units of capacity for which the license is granted will be one (1), unless a different number of licenses or units of capacity is specified in the Documentation or other materials available to End User. "Designated Processor" means a single stand-alone computing device. "Server" means a Designated Processor that hosts a software application to be accessed by multiple users. "Software" means the computer programs in object code, originally licensed by Avaya and ultimately utilized by End User, whether as stand-alone Products or pre-installed on Hardware. "Hardware" means the standard hardware originally sold by Avaya and ultimately utilized by End User.

License types

Designated System(s) License (DS). End User may install and use each copy of the Software on only one Designated Processor, unless a different number of Designated Processors is indicated in the Documentation or other materials available to End User. Avaya may require the Designated Processor(s) to be identified by type, serial number, feature key, location or other specific designation, or to be provided by End User to Avaya through electronic means established by Avaya specifically for this purpose.

Shrinkwrap License (SR). Customer may install and use the Software in accordance with the terms and conditions of the applicable license agreements, such as "shrinkwrap" or "clickthrough" license accompanying or applicable to the Software ("Shrinkwrap License"). (see "Third-party Components" for more information).

Copyright

Except where expressly stated otherwise, no use should be made of materials on this site, the Documentation, Software, or Hardware provided by Avaya. All content on this site, the documentation and the Product provided by Avaya including the selection, arrangement and design of the content is owned either by Avaya or its licensors and is protected by copyright and other intellectual property laws including the sui generis rights relating to the protection of databases. You may not modify, copy, reproduce, republish, upload, post, transmit or distribute in any way any content, in whole or in part, including any code and software unless expressly authorized by Avaya. Unauthorized reproduction, transmission, dissemination, storage, and or use without the express written consent of Avaya can be a criminal, as well as a civil offense under the applicable law.

Third-party components

Certain software programs or portions thereof included in the Product may contain software distributed under third party agreements ("Third Party Components"), which may contain terms that expand or limit rights to use certain portions of the Product ("Third Party Terms"). Information regarding distributed Linux OS source code (for those Products that have distributed the Linux OS source code), and identifying the copyright holders of the Third Party Components and the Third Party Terms that apply to them is available on the Avaya Support Web site: http://support.avaya.com/Copyright.

Preventing Toll Fraud

"Toll fraud" is the unauthorized use of your telecommunications system by an unauthorized party (for example, a person who is not a corporate employee, agent, subcontractor, or is not working on your company's behalf). Be aware that there can be a risk of Toll Fraud associated with your system and that, if Toll Fraud occurs, it can result in substantial additional charges for your telecommunications services.

Avaya Toll Fraud Intervention

If you suspect that you are being victimized by Toll Fraud and you need technical assistance or support, call Technical Service Center Toll

Fraud Intervention Hotline at +1-800-643-2353 for the United States and Canada. For additional support telephone numbers, see the Avaya Support Web site: http://support.avaya.com. Suspected security vulnerabilities with Avaya products should be reported to Avaya by sending mail to: securityalerts@avaya.com.

Trademarks

The trademarks, logos and service marks ("Marks") displayed in this site, the Documentation and Product(s) provided by Avaya are the registered or unregistered Marks of Avaya, its affiliates, or other third parties. Users are not permitted to use such Marks without prior written consent from Avaya or such third party which may own the Mark. Nothing contained in this site, the Documentation and Product(s) should be construed as granting, by implication, estoppel, or otherwise, any license or right in and to the Marks without the express written permission of Avaya or the applicable third party.

Avaya is a registered trademark of Avaya Inc.

All non-Avaya trademarks are the property of their respective owners, and "Linux" is a registered trademark of Linus Torvalds.

Downloading Documentation

For the most current versions of Documentation, see the Avaya Support Web site: http://support.avaya.com.

Contact Avaya Support

Avaya provides a telephone number for you to use to report problems or to ask questions about your Product. The support telephone number is 1-800-242-2121 in the United States. For additional support telephone numbers, see the Avaya Web site: http://support.avaya.com.

Federal Communications Commission (FCC) Interference Statement

This equipment has been tested and found to comply with the limits for a Class B digital device, pursuant to Part 15 of the FCC rules. These limits are designed to provide reasonable protection against harmful interference in a residential installation. This equipment generates, uses, and can radiate radio frequency energy and, if not installed and used in accordance with the instructions, may cause harmful interference to radio communications. However, there is no guarantee that interference will not occur in a particular installation. If this equipment does cause harmful interference to radio or television reception, which can be determined by turning the equipment off and on, the user is encouraged to try to correct the interference by one of the following measures:

- Reorient or relocate the receiving antenna.
- Increase the separation between the equipment and receiver.
- Connect the equipment into an outlet on a circuit different from that to which the receiver is connected.
- Consult the dealer or an experienced radio/TV technician for help.

This device complies with Part 15 of the FCC Rules. Operation is subject to the following two conditions: (1) This device may not cause harmful interference, and (2) this device must accept any interference received, including interference that may cause undesired operation.

FCC Caution: Any changes or modifications not expressly approved by the party responsible for compliance could void the user's authority to operate this equipment.

Contents

Chapter 1: About the Avaya A175 Desktop Video Device 9
Side view of the Avaya A175 Desktop Video Device 10
Base and handset 11
Main screen (Communications Application) 13
Turning on the Avaya A175 Desktop Video Device 15
Turning off the Avaya A175 Desktop Video Device 15
Unlocking the Avaya A175 Desktop Video Device 15
Checking the battery status of the Avaya A175 Desktop Video Device 16
Accessing the online help for the Avaya A175 Desktop Video Device 16

Chapter 2: Configuring the Avaya A175 Desktop Video Device 17

Chapter 3: Logging into and out of the server 21
Logging into the server 21
Logging out of the server 21
Using the Avaya A175 Desktop Video Device with a wireless network outside your enterprise network 22

Chapter 4: Making calls 25
Voice calls 25
Making a voice call using the keypad 25
Making a voice call from a contact 26
Making a voice call from a history record 26
Video calls 27
Making a video call using the keypad 27
Making a video call from a contact 28
Making a video call from a history record 29
Changing the size of the video panel 29

Chapter 5: Handling calls 31
Answering a call 31
Ignoring an incoming call 32
Placing a call on hold 32
Resuming a call on hold 32
Hanging up a call 33
Transferring a call 33
Entering digits during a call 33
Muting a call 34
Unmuting a call 34
Muting a video call 34
Unmuting a video call 35
Changing the size of the video panel 35
Switching among your handset, headset, and speakerphone during a call 36
Adjusting the ringer volume 37
Adjusting the speaker volume 37
Adjusting the handset volume 37
Adjusting the headset volume 38

Chapter 6: Using call handling features 39
Setting the Call Forwarding feature 39

Setting the Send All Calls feature....40
Setting the EC500 feature....40

Chapter 7: Conferencing....43
Conferencing calls with Avaya Meeting Exchange....43
Starting a conference using Avaya Meeting Exchange....43
Adding a party to a conference using Avaya Meeting Exchange....43
Placing a conference on hold....44
Resuming a conference on hold....44
Silencing a party on a conference....44
Unsilencing a party on a conference....45
Dropping a party from a conference....45
Hanging up a conference....46
Conferencing calls with Avaya Communication Manager....46
Starting a conference using Avaya Communication Manager....46
Adding a party to a conference using Avaya Communication Manager....47
Placing a conference on hold....47
Resuming a conference on hold....47
Hanging up a conference....48

Chapter 8: Using instant messaging....49
Viewing an incoming instant message....49
Sending an instant message....49
Replying to an instant message....50

Chapter 9: Managing your presence status....51
Changing your availability....51
Changing your status message....51
Tracking the presence of a contact....52

Chapter 10: Accessing your voice mail....53

Chapter 11: Managing contacts....55
Adding a contact....55
Adding a contact from a history record....56
Modifying a contact....56
Adding a picture to a contact....57
Changing the primary telephone number for a contact....57
Changing the primary email address for a contact....58
Merging the cards of a contact....58
Separating the cards of a contact....59
Deleting a contact....59
Tagging a contact as a favorite....60
Tracking the presence of a contact....60

Chapter 12: Managing history records....63
Viewing history records....63
Making a voice call from a history record....64
Making a video call from a history record....64
Deleting history records....65

Chapter 13: Managing your Facebook account....67

Adding a Facebook account....67
Posting a message to a Facebook contact....68
Posting a message to your wall on Facebook....68
Viewing Facebook messages....69
Removing your Facebook account....70

Chapter 14: Managing your Email accounts....71
Adding a Microsoft Exchange account....71
Adding a Gmail account....72
Changing the password for your email account....73
Changing the settings for your email account(s)....73
Accessing your email account(s)....74
Composing an email message....75
Composing an email message to a contact....76
Replying to an email message....76
Forwarding an email message....77
Deleting an email message....77
Accessing your email folders....78
Removing your Microsoft Exchange account....78
Removing your Gmail account....79

Chapter 15: Searching for information....81
Performing a global search....81
Searching for information in your contacts....82

Chapter 16: Using a public LDAP directory....83
Setting up access to a public LDAP directory....83

Chapter 17: Using the web browser....85
Starting the browser....85
Entering a web address....85
Opening another browser window....85
Changing browser windows....86
Closing a browser window....86
Exiting the browser....86
Refreshing a web page....87
Bookmarking a web page....87
Viewing your bookmarks....87
Viewing your most visited sites....88
Viewing your browsing history....88
About the browser settings....88
Changing the page content settings for the browser....88
Changing the privacy settings for the browser....89
Changing the security settings for the browser....90
Changing the advanced settings for the browser....90

Chapter 18: Using an SD card....91
Installing an SD card....91

Chapter 19: Using the calendar....93
Viewing a scheduled event....93
Viewing your next scheduled event....93

Adding an event....94
Modifying an event....94
Deleting an event....95
Accessing the Top bar calendar....96

Chapter 20: Accessing Liquid Decisions....97

Chapter 21: Accessing Quickoffice....99

Chapter 22: Accessing the calculator....101

Chapter 23: Modifying the settings of the Avaya A175 Desktop Video Device....103
Changing the Unlock password....103
Running the Avaya A175 Desktop Video Device in low power mode....104
Selecting the language for the on-screen keyboard....104
Adjusting the display brightness....105
Changing the time format....105
Changing the date format....106
Changing the time zone....106
Changing the animation setting....106
Erasing all data from the Avaya A175 Desktop Video Device....107

Chapter 24: Using Bluetooth devices with the Avaya A175 Desktop Video Device....109
Connecting a Bluetooth device to theAvaya A175 Desktop Video Device....109
Disconnecting a Bluetooth device from theAvaya A175 Desktop Video Device....110

Index....111

Chapter 1: About the Avaya A175 Desktop Video Device

The Avaya A175 Desktop Video Device with the Avaya Flare™ Experience is a high-resolution, touch-screen device that enables you to quickly and easily manage your daily communications (that is, voice calls, video calls, instant messages (IMs), and emails). Running on the Android™ operating system, the Avaya A175 Desktop Video Device can operate on both wired and wireless networks from your desktop.

Using the Avaya A175 Desktop Video Device, you can:

- make and receive voice calls
- make and receive video calls
- start or join multi-party audio conference calls
- start or join multi-party video conference calls
- send and receive instant messages
- see the availability of contacts that you have identified as “buddies”
- access and manage your Microsoft Exchange account

  Once configured, the Avaya A175 Desktop Video Device automatically downloads your Microsoft® Exchange contacts into the Exchange account and downloads the events from your Exchange calendar into theAvaya A175 Desktop Video Device calendar. The Avaya A175 Desktop Video Device will automatically synchronize with your Exchange account (that is, contacts, calendar, and email) at regular intervals to ensure you have the most up-to-date information.
- access your Facebook account

  Once configured, the Avaya A175 Desktop Video Device automatically downloads your Facebook friends into your contacts. The Avaya A175 Desktop Video Device will automatically synchronize your Facebook information at regular intervals to ensure you have the most up-to-date information from your Facebook account.
- access and manage your Gmail account

  Once configured, the Avaya A175 Desktop Video Device automatically downloads your Gmail contacts into the Gmail account. The Avaya A175 Desktop Video Device will automatically synchronize with your Gmail account (that is, contacts and email) at regular intervals to ensure you have the most up-to-date information.
- surf the web

The Avaya A175 Desktop Video Device also supports Bluetooth® devices.

Side view of the Avaya A175 Desktop Video Device

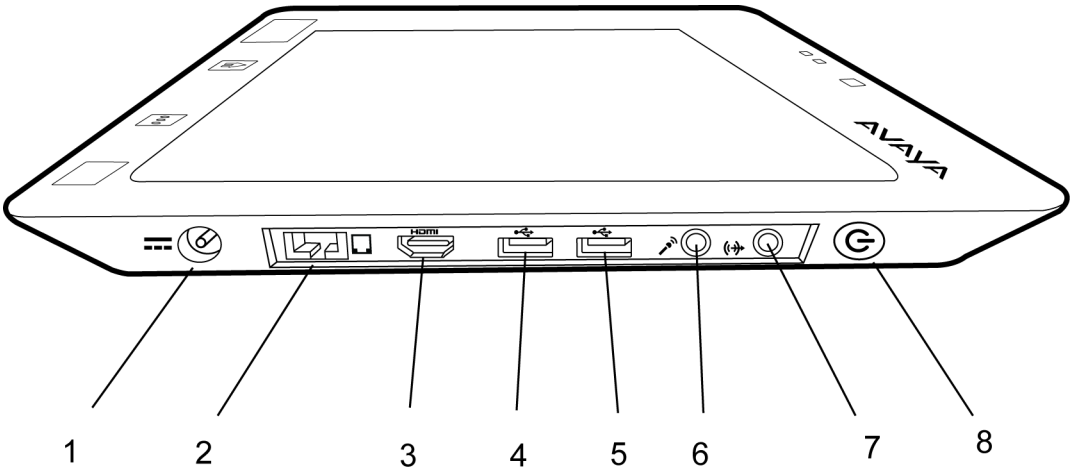

No.	Name	Description
1	Power port	Enables you to connect the power supply to the Avaya A175 Desktop Video Device.
2	Ethernet port	Enables you to connect the Avaya A175 Desktop Video Device to your LAN. This is an RJ-45 port with a speed of 10/M/100M/1G. It is Auto MDIX.
3	HDMI port	Not supported in Release 1.0.
4	USB port	Enables you to connect a USB device (for example, a keyboard or a mouse).
5	USB port	Enables you to connect a USB device (for example, a keyboard or a mouse).
6	Microphone port	Enables you to connect an external microphone.
7	Speaker port	Enables you to connect external speakers.
8	Power button	Turns the Avaya A175 Desktop Video Device on and off.

Base and handset

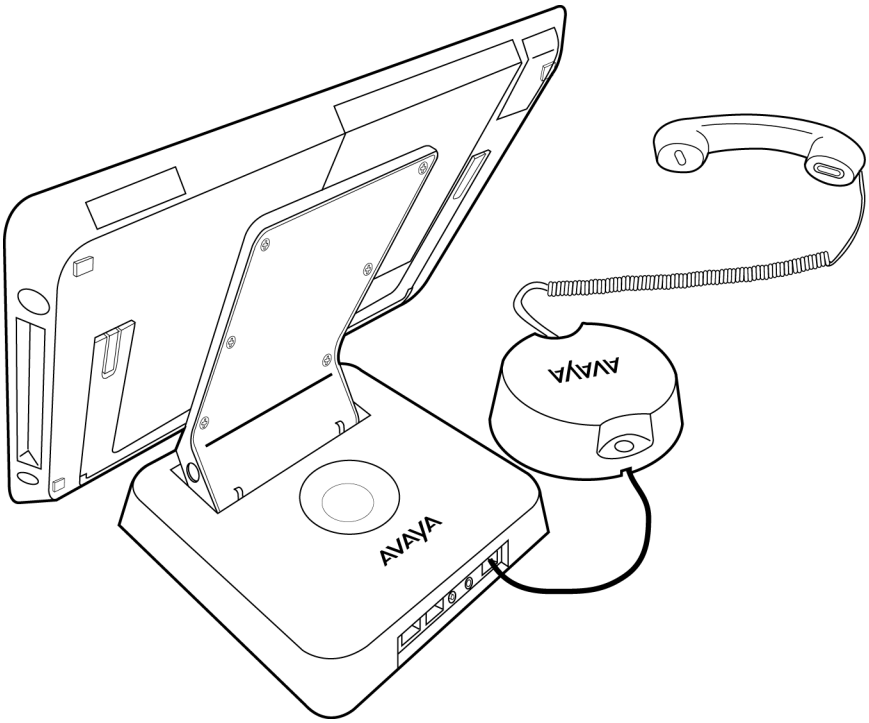

Front of base

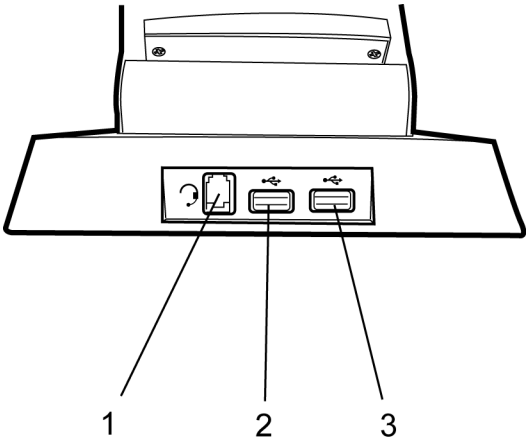

No.	Name	Description
1	Headset port	Enables you to connect a headset.
2	USB port	Enables you to connect a USB device (for example, a keyboard or a mouse).

No.	Name	Description
3	USB port	Enables you to connect a USB device (for example, a keyboard or a mouse).

Back of base

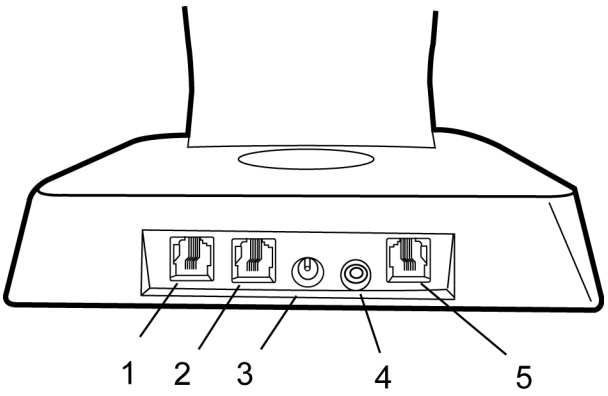

No.	Name	Description
1	Ethernet port	Enables you to connect the Avaya A175 Desktop Video Device to your LAN. This is an RJ-45 port with a speed of 10/M/100M/1G. It is Auto MDIX.
2	Auxiliary Ethernet port	Enables an auxiliary device (such as a PC) to share the Ethernet connection to your LAN.
3	Power port	Enables you to connect the power supply to the Avaya A175 Desktop Video Device.
4	Speaker port	Enables you to connect external speakers.
5	Handset cradle port	Enables you to connect the handset cradle. (The handset connects to the cradle.)

Main screen (Communications Application)

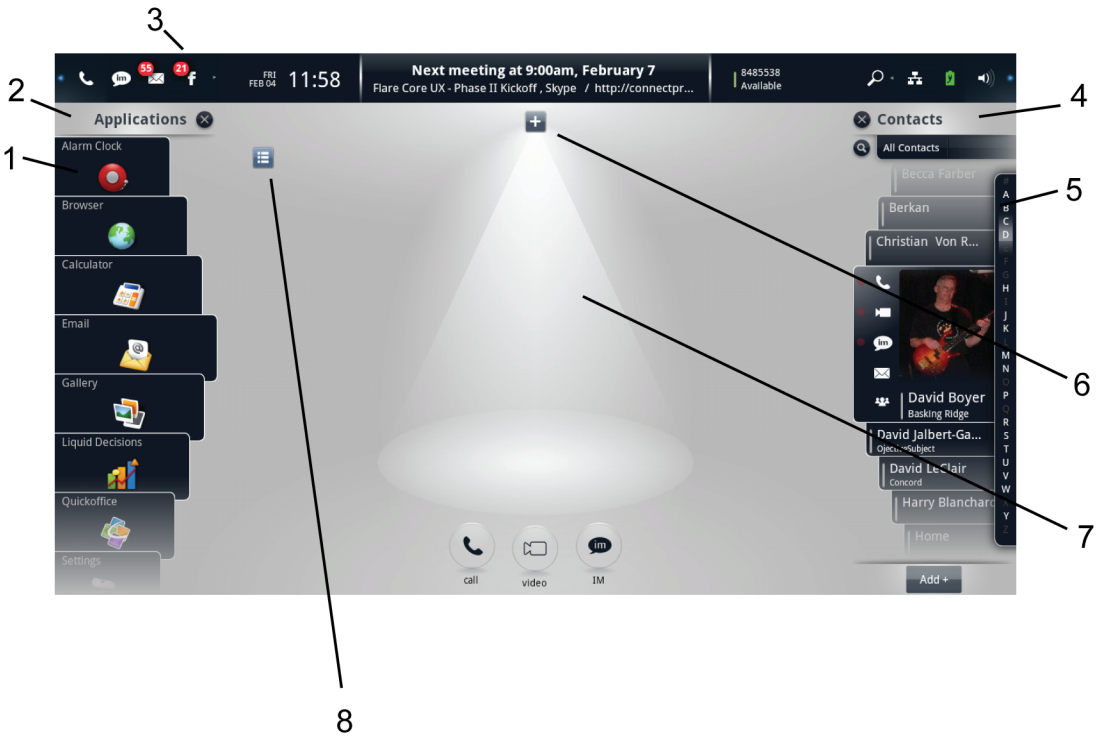

No.	Name	Description
1	Applications fan menu	Enables you to access the Avaya A175 Desktop Video Device applications.
2	Applications fan title	Displays the Applications fan menu and the Applications shortcut menu. The Applications fan menu displays Avaya A175 Desktop Video Device applications. These applications include Alarm Clock, Browser, Calculator, Email, Gallery, Liquid Decisions, Quickoffice, Settings, and Welcome Wizard. The Applications shortcut menu enables you to access the Calendar, History, and online Help (if configured by your system administrator).
3	Top bar	Displays the number of items received (that is, email, instant messages, Facebook messages), the date and time, login status, the Search tool, the volume controls, networking status, and the battery status.
4	Contacts fan title	Enables you to access your contacts. Touching the Contacts fan title toggles between your contact sources (for example, Facebook).

No.	Name	Description
5	Contacts fan menu	Displays your contacts. You can view all your contacts or contacts from a specific source (for example, Facebook).
6	Call Control menu	Enables you to put a call on hold, resume a call that is on hold, access the keypad so you can enter touch-tone digits during a call, mute/unmute a call, and hang up a call. The Call Control menu is part of the Communications application, which enables you to handle all of your communications (such as voice calls and video calls). All of your communications (that is, voice calls, video calls, and instant messages) are referred to as “meetings.”
7	Spotlight	Provides a graphical representation of your meeting. (A meeting can include voice calls, video calls, and instant message sessions.) A spotlight appears for each meeting you start or join. Up to three spotlights can be displayed simultaneously. Additional spotlights are represented by icons in the spotlight ribbon.
8	Meetings button	Displays the Meetings panel, which shows each current meeting on the Avaya A175 Desktop Video Device.

The following figure shows the Communications application with two voice calls and one instant messaging session. Note that each call and instant messaging session also shows up in the Meetings panel in separate meetings.

Turning on the Avaya A175 Desktop Video Device

To turn the Avaya A175 Desktop Video Device on, press and hold the power button on the side of the device until **Avaya** appears on the screen.

Turning off the Avaya A175 Desktop Video Device

To turn the Avaya A175 Desktop Video Device off, press and hold the power button on the side of the device until a message appears stating that the Avaya A175 Desktop Video Device is shutting down.

Unlocking the Avaya A175 Desktop Video Device

If you administered an unlock password for theAvaya A175 Desktop Video Device, you will be prompted to enter that password every time the device is “locked.” The Avaya A175 is locked:

- every time you turn on the device
- if there is no activity on the Avaya A175 Desktop Video Device after a time interval specified by your administrator.

1. Touch **Locked** on the Top bar.
2. Enter your unlock password.

   If you forgot your password, touch the **Forgot password** button. The Avaya A175 Desktop Video Device will prompt you to enter the answer to your security question. Once you enter the correct answer, you can enter a new unlock password for the device.
3. Touch the **Unlock** button.

Checking the battery status of the Avaya A175 Desktop Video Device

Use this procedure to monitor the status of the battery in the Avaya A175 Desktop Video Device. If you are concerned about conserving the battery, see Running the Avaya A175 Desktop Video Device in low power mode on page 104.

1. Touch on the Top bar.
   The Battery Status panel displays the current status of the battery.
2. When finished, touch the **Done** button.

Accessing the online help for the Avaya A175 Desktop Video Device

Prerequisites

The online help parameter must be configured properly in the settings file for the Avaya A175 Desktop Video Device. Contact your system administrator for more information.

1. Touch the Applications fan title to display the Applications shortcut menu.
2. On the Applications shortcut menu, touch **Help**.
   The online help for the Avaya A175 Desktop Video Device is displayed in the browser.

Chapter 2: Configuring the Avaya A175 Desktop Video Device

The first time you turn on the Avaya A175 Desktop Video Device you should run the Welcome Wizard to configure the device. Before running this wizard, you should:

- know your telephone number
- know the password for your telephone number
- be connected to a network
- know your Facebook login and password if you want to access Facebook from the Avaya A175 Desktop Video Device
- know your Microsoft Exchange login and password on your company's email server if you want to access your Exchange account from the Avaya A175 Desktop Video Device

  Note:
  ActiveSync must be enabled for your Microsoft Exchange account. Consult your system administrator.

- know your Gmail login and password if you want to access your Gmail account from the Avaya A175 Desktop Video Device

---

1. If the Welcome Wizard did not open automatically (which it does the first time the Avaya A175 Desktop Video Device is turned on), perform the following steps:
   a. Touch the Applications fan title to display the Applications fan menu.
   b. On the Applications fan menu, touch **Welcome Wizard**.
2. Touch the language you want to use, and then touch the **Next** button.
   The Intro panel appears, and the Avaya A175 automatically tests network connectivity and verifies your corporate settings.
3. In the Intro panel, touch the **Next** button.
4. In the New password box, enter the password you want to use to unlock the Avaya A175 Desktop Video Device. (After a specified interval of inactivity, the Avaya A175 Desktop Video Device automatically becomes “locked.”) The password must meet the requirements specified by your system administrator.

   The password is case-sensitive and cannot contain spaces.

   Note:
   Your unlock password should comply with your company's security policy.

5. In the Confirm password box, reenter your password.
6. In the Security question box, enter the security question that you want the Avaya A175 Desktop Video Device to ask you if you forget your unlock password.
7. In the Enter answer box, enter the answer for your security question, and then touch the **Next** button.
8. In the Audio panel, adjust the slider to set the ringer volume. Dragging the slider to the left decreases the ringer volume. Dragging the slider to the right increases the ringer volume.
9. When finished adjusting the ringer volume, touch the **Next** button.
10. In the Brightness panel, adjust the slider to set the brightness of the display. Dragging the slider to the left decreases the brightness. Dragging the slider to the right increases the brightness.
11. When finished adjusting the brightness, touch the **Next** button.
12. In the Time + Date panel, touch the **Use 24 hr time format** check box if you want to use 24–hour time format.
13. In the Select a date format area, select the date format you want use, and then touch the **Next** button.
14. If you want to configure the Avaya A175 Desktop Video Device to access your Facebook account, do the following:
    a. Touch **Add Account**.
    b. In the Add an account panel, touch **Facebook**.
    c. In the Email box, enter the email address associated with your Facebook account.
    d. In the Password box, enter the password for this account.
    e. Touch the **Login** button.

    By default, the Avaya A175 Desktop Video Device will automatically sync with your Facebook account. Your Facebook “friends” will appear as contacts in the Avaya A175 Desktop Video Device. These contacts will be displayed when you view all contacts and Facebook contacts. Each Facebook contact will also display that contact’s Facebook picture. Also, your posts are displayed in the History fan. The number of new posts is displayed at the top of the screen next to the Facebook icon on the Top bar.
15. If you want to configure the Avaya A175 Desktop Video Device to access your Microsoft Exchange account, do the following:
    a. Touch **Add Account**.
    b. In the Add an account panel, touch **Exchange**.
    c. In the Email address box, enter your Exchange email address (for example, `jsmith@yourcompany.com`.
    d. In the Password box, enter the password for this account.
    e. Touch the **Next** button.

f. In the Server settings panel, make sure the correct information is displayed in the Server box.

g. Make sure the correct setting is displayed for the **Use secure connection (SSL)** check box.

h. Make sure the correct setting is displayed for the **Accept all SSL certificates** check box.

i. Touch the **Next** button.

j. In the Account options panel, verify your settings, and touch the **Next** button.

k. If you want to provide a name for this account, enter the name in the Give this account a name box.

l. In the Your name box, specify how you want your name to be displayed on outgoing messages from this email account, and then touch the **Next** button.

By default, the Avaya A175 Desktop Video Device will automatically sync with your Microsoft Exchange account. Your Exchange contacts will appear as contacts in the Avaya A175 Desktop Video Device. These contacts will be displayed when you view all contacts and Exchange contacts.

16. If you want to configure the Avaya A175 Desktop Video Device to access your Gmail account, do the following:

a. Touch **Add Account**.

b. In the Add an account panel, touch **Gmail**.

c. In the Email address box, enter your Gmail address (for example, `jsmith@gmail.com`.

d. In the Password box, enter the password for this account.

e. If you want this email account to be your default account (if you configured an Exchange account), enable the **Send email from this account by default** check box.

f. Touch the **Next** button.

g. In the Server box of the Server settings panel, enter `m.google.com`.

h. Make sure the **Use secure connection (SSL)** check box is enabled.

i. Make sure the **Accept all SSL certificates** check box is enabled.

j. Touch the **Next** button.

k. In the Account options panel, select the appropriate settings for this account.

l. Touch the **Next** button.

m. If you want to provide a name for this account, enter the name in the Give this account a name box.

n. In the Your name box, specify how you want your name to be displayed on outgoing messages from this email account, and then touch the **Done** button.

By default, the Avaya A175 Desktop Video Device will automatically sync with your Gmail account. Your Gmail contacts will appear as contacts in the Avaya A175 Desktop Video Device. These contacts will be displayed when you view all contacts and Gmail contacts.

17. When finished, adding accounts, touch the **Next** button in the Add Account panel.
18. In the Enter username box on the Login panel, enter your telephone number.
19. In the Enter password box, enter the password for your telephone number.
20. Perform one of the following steps:
    - If you are already logged in the Avaya Session Manager server, the **Log out** button is displayed. Go to Step 21.
    - If you are not already logged into the Avaya Session Manager server, touch the **Login** button to log into the server.
21. Touch the **Next** button.
22. Touch the **Finish** button.

Result

The next time you turn on the Avaya A175 Desktop Video Device, it will automatically try to log into the Avaya Session Manager server using the information you provided.

Chapter 3: Logging into and out of the server

Use the procedures in this chapter to:

- log into the Avaya Session Manager server
- log out of the Avaya Session Manager server
- use the Avaya A175 Desktop Video Device with a wireless network outside of your company's enterprise network.

Logging into the server

You must be logged into the Avaya Session Manager server to make and handle calls and instant messages.

The Avaya A175 Desktop Video Device automatically attempts to log into the Avaya Session Manager server when you turn it on. If you administered an Unlock password for the Avaya A175 Desktop Video Device, you will be prompted to enter that password before logging into the server.

Perform this procedure if you need to log into the Avaya Session Manager server manually.

1. Touch the Availability area on the Top bar.
   The Presence panel appears.
2. In the Extension box, enter your extension.
3. In the Password box, enter your password.
4. Touch the **Log in** button.

Logging out of the server

Use this procedure to log out of the Avaya Session Manager server.

After you log out of the Avaya Session Manager server, you will be unable to make and handle calls and instant messages from the Avaya A175 Desktop Video Device. However, you will still

be able to access your email accounts (that is, Exchange and Gmail) and Facebook and browse the internet.

1. Touch the Availability area on the Top bar.
   The Presence panel appears.
2. Touch the **Log Out** button.

Using the Avaya A175 Desktop Video Device with a wireless network outside your enterprise network

Use this procedure to connect the Avaya A175 Desktop Video Device to a wireless network outside of your company's enterprise network (for example, your wireless network at home).

Before performing this procedure, make sure you know the login and password for the wireless network.

Note:
When you are connected to a network other than your enterprise network, you will be unable to make and handle calls and instant messages with the Avaya A175 Desktop Video Device. You will be able to access your email accounts and Facebook and surf the internet.

1. On the Top bar, touch .
2. From the Networking panel, touch the **Modes** button.
3. From the Networking Connections panel, touch **Wifi Only**.
4. From the Network & wireless settings panel, touch **Proxy settings**.
5. From the Proxy settings panel, enter the proxy settings for the wireless network, and then touch the **Save** button.
6. From the Network & wireless settings panel, touch **Wi-Fi settings**.
7. From the Wi-Fi settings panel, touch the Wi-Fi network to which you want to connect.
8. In the Connect to panel, enter the password for the network, and then touch the **Connect** button.

Next steps

Note:

The next time you use the Avaya A175 Desktop Video Device with your company's enterprise network, you must specify the correct networking connection (for example, **Ethernet Only**. Otherwise, you will be unable to connect to the enterprise network.

Chapter 4: Making calls

Use the procedures in this chapter to make voice or video calls from the Avaya A175 Desktop Video Device. You can make calls from:

- the keypad in the Communications application
- a contact
- a history record

Voice calls

Making a voice call using the keypad

1. In the Communications application, touch under the center spotlight to access the keypad. (If you are not in the Communications application, touch on the Top bar or the Home button below the screen to access the Communications application.)
2. Using the keypad, enter the telephone number.
3. Touch .
   The call appears in the center spotlight. A card displaying the party's name or telephone number and picture (if available) appears under the spotlight. The party's name (if available) or telephone number also appears in the Meetings panel. The Call Control menu appears at the top of the spotlight. The Call Control menu displays the call timer, Hold button ( ), Mute button ( ), and End button. Touching at the bottom of the Call Control menu displays additional commands.

If you were active on a call when you touched , your existing call was placed on hold and moved off center stage. Whenever a call is put on hold, the spotlights rotate to move the call on hold out of the center spotlight.

Making a voice call from a contact

1. From the Contacts fan menu, access the appropriate contact card.
2. Perform one of the following steps:
   - On the contact's card, touch to dial the default telephone number for this contact.
   - Drag the contact's card onto the spotlight, release it, and touch . The default telephone number for this contact is dialed.
   - On the contact's card, touch and hold to display the contact's telephone numbers, and then touch the telephone number you want to dial.

   The call appears in the center spotlight. A card displaying the party's name and picture (if available) appears under the spotlight. The party's name also appears in the Meetings panel. The Call Control menu appears at the top of the spotlight. The Call Control menu displays the call timer, Hold button ( ), Mute button ( ), and End button. Touching at the bottom of the Call Control menu displays additional commands.

   If you were active on a call when made this call, your existing call was placed on hold and moved off center stage. Whenever a call is put on hold, the spotlights rotate to move the call on hold out of the center spotlight.

Making a voice call from a history record

1. Touch the Applications fan title to display the Applications shortcut menu.
2. On the Applications shortcut menu, touch **History**.
3. From the History fan menu, access the appropriate history card of the person you want to call.
4. Perform one of the following steps:
   - On the selected history card, touch .
   - Touch the history card, and then touch the **Call** button on the Details tab of the history card.

   The call appears in the center spotlight. A card displaying the party's name or telephone number and picture (if available) appears under the spotlight. The party's name or telephone number also appears in the Meetings panel. The Call Control menu appears at the top of the spotlight. The Call Control menu displays the call timer, Hold button ( ), Mute button ( ), and End button. Touching at the bottom of the Call Control menu displays additional commands.

   If you were active on a call when made this call, your existing call was placed on hold and moved off center stage. Whenever a call is put on hold, the spotlights rotate to move the call on hold out of the center spotlight.

Video calls

You can make video calls to and receive video calls from enterprise numbers that are administered for video.

Making a video call using the keypad

You can only make video calls to enterprise numbers that are enabled for video.

1. In the Communications application, touch to access the keypad. (If you are not in the Communications application, touch on the Top bar to access the Communications application.)
2. Using the keypad, enter the telephone number.
3. Touch .
   The call appears under a spotlight on center stage. When the party answers, a window appears displaying the other party (if that party is transmitting video). A card displaying the party's name or telephone number and picture (if available) appears under the spotlight. The party's name (if available) or telephone number also appears in the Meetings panel. The Call Control menu appears at the top of the spotlight for the call. The Call Control menu displays the call timer, Hold button ( ), Mute button ( ), and End button.

   If you were active on a call when you touched , your existing call was placed on hold and moved off center stage.

Making a video call from a contact

You can only make video calls to enterprise numbers that are enabled for video.

1. From the Contacts fan menu, access the card of the contact you want to call.
2. Perform one of the following steps:
   - On the contact's card, touch . The default telephone number for this contact is dialed.
   - Drag the contact's card onto the spotlight, release it, and touch . The default telephone number for this contact is dialed.
   - On the contact's card, touch and hold to display the contact's telephone numbers, and then touch the telephone number you want to dial.

   The call appears under a spotlight on center stage. When the party answers, a window appears displaying the other party (if that party is transmitting video). A card displaying the party's name or telephone number and picture (if available) appears under the spotlight. The party's name (if available) or telephone number also appears in the Meetings panel. The Call Control menu appears at the top of the

spotlight for the call. The Call Control menu displays the call timer, Hold button ( ), Mute button ( ), and End button.

If you were active on a call when you touched , your existing call was placed on hold and moved off center stage.

Making a video call from a history record

You can only make video calls to enterprise numbers that are enabled for video.

1. Touch the Applications fan title to display the Applications shortcut menu.
2. On the Applications shortcut menu, touch **History**.
3. From the History fan menu, access the appropriate history card of the person you want to call.
4. On the selected history card, touch .
   The call appears under a spotlight on center stage. When the party answers, a window appears displaying the other party (if that party is transmitting video). A card displaying the party's name or telephone number and picture (if available) appears under the spotlight. The party's name (if available) or telephone number also appears in the Meetings panel. The Call Control menu appears at the top of the spotlight for the call. The Call Control menu displays the call timer, Hold button ( ), Mute button ( ), and End button.

   If you were active on a call when you touched , your existing call was placed on hold and moved off center stage.

Changing the size of the video panel

You can adjust the size of the video panel to one of the following sizes:

- small
- medium
- large (full screen)

Note:
You must be on a video call to change the size of the video panel

Perform one of the following steps:

- If you want to increase the size of the video panel, touch the Maximize icon on the top, right corner of the video panel.
- If you want to decrease the size of the video panel, touch the Minimize icon on the top, right corner of the video panel.

  If the video panel is full screen, double-touch anywhere in the video panel or touch the Minimize icon on the bottom, right corner of the screen to reduce its size.

Chapter 5: Handling calls

Use the procedures in this chapter to handle calls on the Avaya A175 Desktop Video Device. With the Avaya A175 Desktop Video Device, you can:

- answer voice calls
- answer video calls (if available)
- ignore incoming calls
- place calls on hold
- hang up calls
- transfer calls
- enter touch-tone digits during calls
- mute/unmute calls
- change the size of the video panel
- switch among your handset, headset, and speakerphone during a call
- adjust the volume of the ringer, speaker, handset, and headset

Answering a call

When you receive a voice or video call, the incoming call panel appears, displaying the Answer and Ignore buttons. If the Communications application is displayed when you receive a call, the incoming call panel appears in the middle of the screen. If the Communications application is not displayed when you receive a call (for example, the browser is open), the incoming call panel appears on the Top bar.

If you are already active on a call, and you answer an incoming call, the current call is put on hold, and the spotlights rotate to move the held call off center stage. The call that you just answered appears in the center spotlight.

To answer a call, touch the **Answer** button for the call or lift your handset (if connected).
The call appears under a spotlight on center stage. The call control menu appears at the top of the spotlight for the call. The Call Control menu displays the call timer, Hold

button (), Mute button (), and End button. Touching at the bottom of the Call Control menu displays additional commands.

A card displaying the caller's name or telephone number and picture (if available) appears in the spotlight on center stage. The caller's name (if available) or telephone number also appears in the Meetings panel.

Note:

When you answer a video call, the video panel appears, and your video is muted (that is, the Avaya A175 Desktop Video Device is not transmitting video). Touch the **Video Unmute** button to transmit video to the other party.

Ignoring an incoming call

Use this procedure to disable ringing for an incoming call.

To ignore an incoming call, touch the **Ignore** button for the call.
Ringing stops for this call.

Placing a call on hold

To place a call on hold, touch on the Call Control menu.
The Hold button turns blue.

Resuming a call on hold

To resume a call on hold, touch on the Call Control menu for the call.

If the call you want to resume is not in the center spotlight, touch the icon at the top of the spotlight for that call to access the Call Control menu.

The call becomes active and takes center stage.

Hanging up a call

To hang up a call, touch **End** on the Call Control menu for the call.

Transferring a call

1. If the party to whom you want to transfer the call is not already on a call with you, call that party.
   The call you want to transfer is automatically put on hold, and a card appears for the new call in the center spotlight.
2. Drag the card of the active call from center stage and drop it on the spotlight of the call on hold. (You can also drag the card of the call on hold and drop it on the spotlight of the active call.)
3. Touch the **Transfer** button.

Entering digits during a call

Use this procedure to enter touch-tone digits during a call.

1. Touch at the bottom of the Call Control menu to expand it.
2. Touch **Touchtone** to access the keypad.
3. Touch the digits you want to enter.
4. When finished, touch **X** at the top of the keypad.

Muting a call

Muting a call mutes all calls on the Avaya A175 Desktop Video Device.

To mute a call, touch on the Call Control menu.
The Mute button turns blue.

Unmuting a call

To unmute a call, touch on the Call Control menu.

Muting a video call

When you mute a video call, the Avaya A175 Desktop Video Device stops transmitting your video to the other party.

Note:
When a video call is muted, the other party can still hear audio from you.

To mute a video call, touch the **Video Mute** button at the bottom of the video panel. The Video Unmute button appears at bottom of the video panel.

Unmuting a video call

To unmute a video call, touch the **Video Unmute** button at the bottom of the video panel.

Changing the size of the video panel

You can adjust the size of the video panel to one of the following sizes:

- small
- medium
- large (full screen)

Note:
You must be on a video call to change the size of the video panel

Perform one of the following steps:

- If you want to increase the size of the video panel, touch the Maximize icon on the top, right corner of the video panel.
- If you want to decrease the size of the video panel, touch the Minimize icon on the top, right corner of the video panel.

  If the video panel is full screen, double-touch anywhere in the video panel or touch the Minimize icon on the bottom, right corner of the screen to reduce its size.

Switching among your handset, headset, and speakerphone during a call

Prerequisites

To perform this procedure, you must be on a call and have a handset and/or headset installed.

1. If you want to switch from the speakerphone to the handset, lift the handset.
2. If you want to switch from the handset to the speakerphone:
   a. Touch on the Top bar.
      The Volume Control panel appears.
   b. Touch the **Speaker** button.
   c. Hang up the handset.
   d. Touch anywhere outside the Volume Control panel to close it.
3. If you want to switch from the handset to the headset:
   a. Touch on the Top bar.
      The Volume Control panel appears.
   b. Touch the **Headset** button.
   c. Hang up the handset.
   d. Touch anywhere outside the Volume Control panel to close it.
4. If you want to switch from the headset to the handset, lift the handset.
5. If you want to switch from the headset to the speakerphone:
   a. Touch on the Top bar.
      The Volume Control panel appears.
   b. Touch the **Speaker** button.
   c. Touch anywhere outside the Volume Control panel to close it.

Adjusting the ringer volume

You can only change the ringer volume when you are not on a call.

1. Touch on the Top bar.
   The Volume Control panel displays the current ringer volume setting.
2. Perform one of the following steps:
   - Move the slider to the right to increase the volume.
   - Move the slider to the left to decrease the volume.
3. When finished, touch anywhere outside the Volume Control panel to close it.

Adjusting the speaker volume

Prerequisites

You must be on a call and using the speakerphone to adjust the speaker volume.

1. Touch on the Top bar.
   The Volume Control panel displays the current speaker volume setting.
2. Perform one of the following steps:
   - Move the slider to the right to increase the volume.
   - Move the slider to the left to decrease the volume.
3. When finished, touch anywhere outside the Volume Control panel to close it.

Adjusting the handset volume

Prerequisites

You must be on a call and using the handset connected to the base to adjust the handset volume.

1. Touch on the Top bar.
   The Volume Control panel displays the current handset volume setting.
2. Perform one of the following steps:
   - Move the slider to the right to increase the volume.
   - Move the slider to the left to decrease the volume.
3. When finished, touch anywhere outside the Volume Control panel to close it.

Adjusting the headset volume

Prerequisites

You must be on a call and using a headset connected to the base to adjust the headset volume.

1. Touch on the Top bar.
   The Volume Control panel displays the current headset volume setting.
2. Perform one of the following steps:
   - Move the slider to the right to increase the volume.
   - Move the slider to the left to decrease the volume.
3. When finished, touch anywhere outside the Volume Control panel to close it.

Chapter 6: Using call handling features

Use the procedures in this chapter to use the following features with the Avaya A175 Desktop Video Device:

- Call Forwarding
- Send All Calls
- EC500

Note:

These features must be administered for your account. Contact your system administrator for more information.

Setting the Call Forwarding feature

Prerequisites

The Call Forwarding feature must be administered for your account. Contact your system administrator for more information.

1. Touch on the Top bar.
   The Call Forwarding panel appears.
2. Perform one of the following steps:

   If you want to enable the Call Forwarding feature:

   a. In the All Calls text box, enter the telephone number to which you want to forward your calls.

   b. Touch the corresponding check box.
      The check box becomes enabled.

   If you want to disable the Call Forwarding feature, touch the check box next the All Calls text box. The check box becomes disabled.
3. Touch the **Done** button.

Setting the Send All Calls feature

Prerequisites

The Send All Calls feature must be administered for your account. Contact your system administrator for more information.

1. Touch on the Top bar.
   The Call Forwarding panel appears.
2. Perform one of the following steps:
   - If you want to enable the Send All Calls feature, touch the Send All Calls check box. The check box becomes enabled.
   - If you want to disable the Send All Calls feature, touch the Send All Calls check box. The check box becomes disabled.
3. Touch the **Done** button.

Setting the EC500 feature

Prerequisites

The EC500 feature must be administered for your account. Contact your system administrator for more information.

1. Touch on the Top bar.
   The Call Forwarding panel appears.
2. Perform one of the following steps:
   - If you want to enable the EC500 feature, touch the EC500 check box. The check box becomes enabled.

- If you want to disable the EC500 feature, touch the EC500 check box. The check box becomes disabled.

3. Touch the **Done** button.

Chapter 7: Conferencing

Use the procedures in this chapter to conference calls from the Avaya A175 Desktop Video Device. Depending on your company's system and how your Avaya A175 Desktop Video Device is administered, you can conference calls with either Avaya Meeting Exchange or Avaya Aura® Communication Manager.

Conferencing calls with Avaya Meeting Exchange

Starting a conference using Avaya Meeting Exchange

Use this procedure to start a conference using Avaya Meeting Exchange.

1. From the Contacts fan menu, drag the card of the party you want to include in the conference and drop it on a spotlight.
2. Repeat Step 1 for each party you want to include in the conference.
3. Perform one of the following steps:
   - If you want to have a video conference, touch .
   - If you want to have a voice conference, touch .

   The conference appears in the Meetings panel.

Adding a party to a conference using Avaya Meeting Exchange

Use this procedure to add a party to an existing conference using Avaya Meeting Exchange.

1. Perform one of the following steps:

- If the party you want to add to the conference is already on a call with you, drag the card for that call and drop it on the spotlight of the conference.
- If the party you want to add to the conference is not already on a call with you, drag the card of that party from the Contacts fan menu, and drop it on the spotlight of the conference.

2. Touch the **Conference** button.
   The card for the contact is added to the spotlight of the conference, and the number of participants for this conference is updated in the Meetings panel.

Placing a conference on hold

To place a conference on hold, touch on the Call Control menu for the conference.
The Hold button turns blue.

Resuming a conference on hold

To resume a conference on hold, touch on the Call Control menu for the conference.

If the conference you want to resume is not in the center spotlight, touch the icon at the top of the spotlight for the conference to access the Call Control menu.

The conference becomes active and takes center stage.

Silencing a party on a conference

Prerequisites

You must be using Avaya Meeting Exchange to perform this procedure.

1. In the spotlight for the conference, touch the card of the party you want to silence. If you want to silence all of the parties, touch **Select All** from the Call Control menu for the conference.
   The card becomes highlighted (selected).
2. Touch **Silence** on the Call Control menu for the conference.

Unsilencing a party on a conference

Prerequisites

You must be using Avaya Meeting Exchange to perform this procedure.

1. In the spotlight for the conference, touch the card of the party you want to unsilence.
   The card becomes highlighted (selected).
2. Touch **Unsilence** on the Call Control menu for the conference.

Dropping a party from a conference

Prerequisites

You must be using Avaya Meeting Exchange to perform this procedure.

1. In the spotlight for the conference, touch the card of the party you want to drop.
   The card becomes highlighted (selected).
2. Touch **Drop** on the Call Control menu for the conference.

Hanging up a conference

Typically, when you hang up a conference, the call is disconnected. However, depending on how your company's voice system is configured, the call could continue for the other parties after you hang up.

To hang up a conference, touch **End** on the Call Control menu for the conference.

Conferencing calls with Avaya Communication Manager

Starting a conference using Avaya Communication Manager

Use this procedure to start a conference using Avaya Communication Manager (that is, without using Avaya Meeting Exchange).

Depending on how your Avaya Communication Manager system is administered, you may have up to six participants (including yourself) in a conference.

1. Make sure there is a call in the Communications application.
2. Perform one of the following steps:
   - If the party you want to conference is already on a call with you, drag the card of the active call from center stage and drop it on the spotlight of the call on hold. (You can also drag the card of the call on hold and drop it on the spotlight of the active call.)
   - If the party you want to conference is not already on a call with you, drag the card of that party from the Contacts fan menu, and drop it on the spotlight of the active call.
3. Touch the **Conference** button.
   A card appears for the conference in the center spotlight. The conference also appears in the Meetings panel.

Adding a party to a conference using Avaya Communication Manager

Use this procedure to add a party to an existing conference using Avaya Communication Manager (that is, without using Avaya Meeting Exchange).

Depending on how your Avaya Communication Manager system is administered, you may have up to six participants (including yourself) in a conference.

1. Perform one of the following steps:
   - If the party you want to add to the conference is already on a call with you, drag the card for that call and drop it on the spotlight of the conference. (You can also drag the card of the conference and drop it on the spotlight of the call you want to add.)
   - If the party you want to add to the conference is not already on a call with you, drag the card of that party from the Contacts fan menu, and drop it on the spotlight of the conference.
2. Touch the **Conference** button.
   The number of participants for this conference is updated in the Meetings panel.

Placing a conference on hold

To place a conference on hold, touch on the Call Control menu for the conference.
The Hold button turns blue.

Resuming a conference on hold

To resume a conference on hold, touch on the Call Control menu for the conference.

If the conference you want to resume is not in the center spotlight, touch the icon at the top of the spotlight for the conference to access the Call Control menu.

The conference becomes active and takes center stage.

Hanging up a conference

Typically, when you hang up a conference, the call is disconnected. However, depending on how your company's voice system is configured, the call could continue for the other parties after you hang up.

To hang up a conference, touch **End** on the Call Control menu for the conference.

Chapter 8: Using instant messaging

Using the Avaya A175 Desktop Video Device, you can:

- receive instant messages (IMs)
- send instant messages
- replay to instant messages

Viewing an incoming instant message

When you receive an instant message, the message is displayed on the Top bar.

To view an incoming instant message, touch the **View** button for the message on the Top bar.
The instant message appears under a spotlight on center stage and in the Meetings panel.

Sending an instant message

1. Perform one of the following steps:
   - Drag and drop the contact's card to an empty spotlight in the Communications application, and touch .
   - Touch on the contact's card.
   - Touch on the history record of the contact.
   - If you want to send an instant message to a party who is on a call with you, touch that party's card on the spotlight stage and then touch . An IM icon

is added to that party's card, indicating that you have an instant messaging session with that party.

2. In the Instant Message panel, enter your message.
3. When finished, touch **Send**.
   The Meetings panel displays the instant messaging session.

Replying to an instant message

1. In the Meetings panel, touch the appropriate instant messaging session.
2. Enter your message, and touch the **Send** button.

Chapter 9: Managing your presence status

Use the procedures in this chapter to:

- change your presence status (that is, availability)
- change your custom presence status message
- specify the enterprise contacts whose presence you want to track

Changing your availability

Use this procedure to set your presence status (that is, availability). Your presence status is displayed to other users who track your presence.

1. Touch your extension number on the Top bar.
   The Presence panel appears.
2. Touch the **Availability** drop-down list box.
3. Touch the setting you want to use. If you want the Avaya A175 Desktop Video Device to automatically update your presence status (for example, automatically display “Busy” when you are on a call or display “Available” when you are not on a call), touch **Automatic**.
4. Touch the **Done** button to close the drop-down list box.
5. Touch the **Done** button to close the Presence panel.

Changing your status message

Use this procedure to specify a custom presence status message. For example, if you are in a meeting until 2 pm and do not want to be disturbed, you can enter the custom presence status message “In a meeting until 2 pm.”

Your presence status message is displayed to other users who track your presence.

1. Touch your extension number on the Top bar.

The Presence panel appears.

2. Enter your new message in the Status Message box. If you want to clear the contents of this box, touch **X**.
3. When you are finished, touch the **Done** button.

Tracking the presence of a contact

Use this procedure to specify contacts whose presence you want to track. These contacts will be displayed as Buddies in the Contacts fan menu. Once you have identified a contact as a “Buddy,” the LED on that contact's card will indicate that contact's status. You will be able to determine the availability of each contact by looking at the Contacts fan menu.

Note:

You can only track the presence of contacts who have extensions on your company's Avaya Session Manager server.

1. Touch the Contacts fan title to display the Contacts fan.
2. Touch the contact whose presence you want to track.
3. Touch the contact again.
4. On the Details tab in the Contact panel, touch the **Buddy** button.
   The associated check mark turns blue, and a card for this contact is added to both Buddies and Avaya Aura Contacts.

Chapter 10: Accessing your voice mail

When you receive a voice mail message, the voice mail indicator ( ) on the Top bar turns red.

1. Touch on the Top bar.
   A call is placed to your voice mail system.
2. Log into your voice mail system. See Entering digits during a call on page 33.

Chapter 11: Managing contacts

The Avaya A175 Desktop Video Device supports following types of contacts:

- Aura contacts, which you manually add. You can modify these contacts any time.
- Facebook contacts, which are your Facebook friends. The Avaya A175 Desktop Video Device automatically downloads these contacts when you configure access to your Facebook account. You cannot modify these contacts.
- Exchange contacts, which are the contacts from your Microsoft Exchange account. The Avaya A175 Desktop Video Device automatically downloads these contacts when you configure access to your Exchange account. You can modify these contacts any time. Any changes you make to these contacts with the Avaya A175 Desktop Video Device are synchronized with your Exchange account and show up there.
- Gmail contacts, which are the contacts from your Gmail account. The Avaya A175 Desktop Video Device automatically downloads these contacts when you configure access to your Gmail account. You can modify these contacts any time. Any changes you make to these contacts with the Avaya A175 Desktop Video Device are synchronized with your Gmail account and show up there.

The Avaya A175 Desktop Video Device provides the following views (or groupings) of your contacts:

- All Contacts (which are the Aura contacts you created in the Avaya A175 Desktop Video Device, the friends from your Facebook account, the contacts from your Exchange account, and the contacts from your Gmail account).
- Aura Contacts (which are the contacts you created in the Avaya A175 Desktop Video Device).
- Favorites (which are any contacts that you “tagged”)
- Buddies (which are contacts whose presence you are tracking). You can track the presence of a contact by selecting the Buddy option for the contact.
- Facebook (which are friends from Facebook)
- Exchange (which are contacts from your Exchange account)
- Gmail (which are contacts from your Gmail account)
- Directory Search

Adding a contact

1. Touch the Contacts fan title to display Contacts menu fan.
2. Touch the **Add+** button.
3. In the Create contact under account panel, touch the account to which you want to add the new contact.
4. Complete the Edit contact panel to enter information for the contact.
5. When finished, touch the **Save** button.
   The contact appears in the All Contacts group and the contacts account you specified.

Adding a contact from a history record

1. Touch the Applications fan title to display the Applications shortcut menu.
2. On the Applications shortcut menu, touch **History**.
3. From the History fan, touch the history card for the contact you want to add.
4. Touch the history card again.
5. From the History panel, touch the **+Contacts** button.
6. From the Contacts panel, touch **Create new contact**.
7. From the Create contact under account panel, touch the contacts account to which you want to add this contact.
8. Complete the Edit contact panel.
9. When finished, touch the **Save** button.
   The name of the contact you added appears on the history card, and a card for this contact appears in the Contacts menu fan.

Modifying a contact

You cannot modify Facebook contacts.

1. Touch the Contacts fan title to display the Contacts fan menu.
2. Touch the contact you want to modify.
3. Touch the picture of the contact.
4. On the Details tab in the Contact panel, touch the **Edit** button.
5. In the Edit contact panel, make your changes.
6. When finished, touch the **Save** button.

Adding a picture to a contact

Prerequisites

To perform this procedure, you must insert an SD card that contains a picture that you want to add to a contact.

1. Touch the Contacts fan title to display the Contacts fan menu.
2. Touch the contact to which you want to add a picture.
3. Touch the picture of the contact.
4. On the Details tab in the Contact panel, touch the **Edit** button.
5. In the Edit contact panel, touch the picture.
   The Select picture panel appears displaying the pictures on the SD card.
6. Touch the picture you want use.
   The picture is displayed with a cropping box.
7. Move the cropping box to select the part of the picture you want displayed for the contact, and then touch the **Save** button.
8. When finished, touch the **Save** button in the Edit contact panel.

Changing the primary telephone number for a contact

When you make a call from a contact, the Avaya A175 Desktop Video Device automatically uses the primary (default) telephone number for the associated contact. Use this procedure if

a contact has multiple telephone numbers, and you want to specify one of the other numbers as the primary telephone number.

1. Touch the Contacts fan title to display the Contacts fan menu.
2. Touch the contact you want to modify.
3. Touch the picture of the contact.
4. On the Details tab in the Contact panel, touch and hold the telephone number that you want to use as the contact's primary number.
5. From the Options panel, touch **Make This Primary**.
6. When finished, touch **X** to close the Contact panel.

Changing the primary email address for a contact

When you touch to create an email message, the Avaya A175 Desktop Video Device automatically uses the primary (default) email address for the associated contact. Use this procedure if a contact has multiple email addresses, and you want to specify one of the other email addresses as the primary email address.

1. Touch the Contacts fan title to display the Contacts fan menu.
2. Touch the contact you want to modify.
3. Touch the picture of the contact.
4. On the Details tab in the Contact panel, touch and hold the email address that you want to use as the contact's primary email.
5. From the Options panel, touch **Make This Primary**.
6. When finished, touch **X** to close the Contact panel.

Merging the cards of a contact

Use this procedure to merge the separate cards of a contact into one card.

1. Touch the Contacts fan title to display the Contacts fan menu.
2. Touch the contact you want to modify.
3. Touch the picture of the contact.
4. On the Details tab in the Contact panel, touch the **Edit** button.
5. In the Edit contact panel, touch the **Menu** button.
   A row of buttons appears at the bottom of the panel.
6. Touch the **Join** button on the bottom of the panel.
   The Contacts panel appears.
7. Touch the contact you want to merge.
8. Touch the **Save** button to save your changes.

Separating the cards of a contact

Use this procedure to separate the cards of a contact that were previously joined (that is, the separate cards from other sources such as Facebook, Gmail, or Exchange for a contact were merged to create one card).

1. Touch the Contacts fan title to display the Contacts fan menu.
2. Touch the contact you want to modify.
3. Touch the picture of the contact.
4. On the Details tab in the Contact panel, touch the **Edit** button.
5. In the Edit contact panel, touch the **Menu** button.
   A row of buttons appears at the bottom of the panel.
6. Touch the **Separate** button on the bottom of the panel.
   The Separate Contact panel appears.
7. Touch the **OK** button to separate this contact into multiple contacts.

Deleting a contact

You cannot delete Facebook contacts.

1. Touch the Contacts fan title to display the Contacts menu fan.
2. Touch the contact you want to modify.
3. Touch the picture of the contact.
4. On the Details tab in the Contact panel, touch the **Edit** button.
5. Touch the **Delete** button.
6. Touch the **OK** button in the Delete panel.

Tagging a contact as a favorite

Use this procedure to add a contact as a favorite from the Contacts fan menu. You can also add a contact as a favorite from a history record.

1. Touch the Contacts fan title to display the Contacts fan menu.
2. Touch the contact you want to tag as a favorite.
3. Touch the picture of the contact.
4. On the Details tab in the Contact panel, touch the **Favorite** button.
   The star on the Favorite button turns blue.

Tracking the presence of a contact

Use this procedure to specify contacts whose presence you want to track. These contacts will be displayed as Buddies in the Contacts fan menu. Once you have identified a contact as a “Buddy,” the LED on that contact's card will indicate that contact's status. You will be able to determine the availability of each contact by looking at the Contacts fan menu.

Note:
You can only track the presence of contacts who have extensions on your company's Avaya Session Manager server.

1. Touch the Contacts fan title to display the Contacts fan.
2. Touch the contact whose presence you want to track.

3. Touch the contact again.
4. On the Details tab in the Contact panel, touch the **Buddy** button.
   The associated check mark turns blue, and a card for this contact is added to both Buddies and Avaya Aura Contacts.

Chapter 12: Managing history records

Use the procedures in this chapter to:

- view history records
- make calls from history records
- delete history records

Viewing history records

1. Touch the Applications fan title to display the Applications shortcut menu.
2. On the Applications shortcut menu, touch **History**.
   Communications appears and displays the history records for all of your conversation-based communications (that is, voice calls, video calls, and instant messages).
3. Perform one of the following steps:
   - If you want to view the history records for voice calls, touch **Communications**, and then touch **Calls**.
   - If you want to view the history records for video calls, touch **Communications**, and then touch **Video**.
   - If you want to view the history records for instant messages, touch **Communications**, and then touch **IM**.
   - If you want to view the history records for Facebook, touch **Communications**, and then touch **Facebook**.

   All of the corresponding history records of the type you selected are displayed.
4. If you want to view a specific category of history records (for example, **Missed**, **Incoming**, or **Outgoing** for voice calls), touch **All**, and select the appropriate category.
5. From the History fan, touch the card you want to view.
   The Details tab appears for the selected card.
6. When finished, touch **X**.

Making a voice call from a history record

1. Touch the Applications fan title to display the Applications shortcut menu.
2. On the Applications shortcut menu, touch **History**.
3. From the History fan menu, access the appropriate history card of the person you want to call.
4. Perform one of the following steps:
   - On the selected history card, touch .
   - Touch the history card, and then touch the **Call** button on the Details tab of the history card.

   The call appears in the center spotlight. A card displaying the party's name or telephone number and picture (if available) appears under the spotlight. The party's name or telephone number also appears in the Meetings panel. The Call Control menu appears at the top of the spotlight. The Call Control menu displays the call timer, Hold button ( ), Mute button ( ), and End button. Touching at the bottom of the Call Control menu displays additional commands.

   If you were active on a call when made this call, your existing call was placed on hold and moved off center stage. Whenever a call is put on hold, the spotlights rotate to move the call on hold out of the center spotlight.

Making a video call from a history record

You can only make video calls to enterprise numbers that are enabled for video.

1. Touch the Applications fan title to display the Applications shortcut menu.
2. On the Applications shortcut menu, touch **History**.

3. From the History fan menu, access the appropriate history card of the person you want to call.
4. On the selected history card, touch .
   The call appears under a spotlight on center stage. When the party answers, a window appears displaying the other party (if that party is transmitting video). A card displaying the party's name or telephone number and picture (if available) appears under the spotlight. The party's name (if available) or telephone number also appears in the Meetings panel. The Call Control menu appears at the top of the spotlight for the call. The Call Control menu displays the call timer, Hold button ( ), Mute button ( ), and End button.

   If you were active on a call when you touched , your existing call was placed on hold and moved off center stage.

Deleting history records

Use this procedure to delete all history records.

1. Touch the Applications fan title to display the Applications shortcut menu.
2. On the Applications shortcut menu, touch **History**.
   Communications appears and displays the history records for all of your conversation-based communications (that is, voice calls, video calls, and instant messages).
3. Touch the **Clear Log** button at the bottom of the screen.
   The Confirm Delete panel appears.
4. Touch the **Yes** button to delete the history records.

Chapter 13: Managing your Facebook account

Use the procedures in this chapter to manage your Facebook account from the Avaya A175 Desktop Video Device. Using the Avaya A175 Desktop Video Device, you can:

- add a Facebook account
- respond to a Facebook friend's post or status message
- post a message to your wall on Facebook
- view Facebook messages
- remove your Facebook account

Note:
The Avaya A175 Desktop Video Device can access and manage only one Facebook account.

Once you configure the Avaya A175 Desktop Video Device to access your Facebook account, the Avaya A175 Desktop Video Device will automatically download all of your Facebook friends (along with each friend's Facebook picture) to your contact list. You can view these contacts by touching **All Contacts** or **Facebook** in the Contacts fan menu.

If you already have a contact card for a Facebook contact, the Avaya A175 Desktop Video Device will automatically merge your existing information for that contact with the information downloaded from Facebook.

Keep in mind the following information:

- You cannot modify the contact information for a Facebook contact with the Avaya A175 Desktop Video Device.
- By default, the Avaya A175 Desktop Video Device will automatically synchonize with Facebook to retrieve messages and update contact information for your Facebook friends.

Adding a Facebook account

You can have only one Facebook account on the Avaya A175 Desktop Video Device.

1. Touch the Applications fan title to display the Applications fan menu.
2. On the Applications fan menu, touch **Settings**.
3. From the Settings panel, touch **Accounts & sync**.
4. From the Accounts & sync settings panel, touch the **Add Account** button.
5. From the Add an account panel, touch **Facebook**.
6. In the Email box, enter the email address associated with the Facebook account.
7. In the Password box, enter the password for this account.
8. Touch the **Login** button.

Result

Your account appears in the Manage accounts section of the Account & sync settings pane. By default, the Avaya A175 Desktop Video Device will automatically sync with your Facebook account. Your Facebook “friends” will appear as contacts in the Avaya A175 Desktop Video Device. These contacts will be displayed when you view all contacts and Facebook contacts. Each Facebook contact will also display that contact’s Facebook picture. Also, your posts are displayed in the History fan. The number of new posts is displayed at the top of the screen next to the Facebook icon on the Top bar.

Posting a message to a Facebook contact

1. Touch the Contacts fan title to display the Contacts fan menu.
2. Touch **Facebook**.
3. Touch the contact to whom you want to post a message.
4. Touch for the contact.
5. In the Send WallPost panel, enter your message.
6. When finished, touch the **Send** button.

Posting a message to your wall on Facebook

1. Touch the Availability area on the Top bar.
   The Presence panel appears.
2. In the Facebook text box, enter your message.
3. When finished, touch the **Publish** button.

Viewing Facebook messages

Your Facebook messages (that is, sent messages, received messages, and status updates) are displayed in the History fan. The Avaya A175 Desktop Video Device displays the number of new posted messages next to the Facebook icon on the Top bar. You can access your Facebook messages from the History fan or by touching the Facebook icon on the Top bar.

1. Touch the Facebook icon on the Top bar.
   All of your Facebook messages are displayed.
2. Perform one of the following steps:
   - If you want to view status updates from your Facebook friends, touch **All** and touch **Status Updates**.
   - If you want to view the messages you sent to Facebook friends, touch **All** and touch **Messages Sent**.
   - If you want to view the messages you received from Facebook friends, touch **All** and touch **Messages Received**.

   All of the corresponding history records of the type you selected are displayed.
3. Touch the message you want to view.
4. Touch the message again.
   The Details tab for the selected message displays the contact's name, picture, instant messaging presence (if the Facebook contact has an enterprise phone number), whether he or she is currently logged into Facebook, the time, day, and date the message was posted, and the message.

Removing your Facebook account

Perform this procedure if you no longer want to access Facebook from the Avaya A175 Desktop Video Device.

Note:
When you remove your Facebook account from the Avaya A175 Desktop Video Device, all of the messages and contacts in this account are deleted from the Avaya A175 Desktop Video Device.

1. Touch the Applications fan title to display the Applications fan menu.
2. On the Applications fan menu, touch **Settings**.
3. From the Settings panel, touch **Accounts & sync**.
4. From the Manage accounts section of the Accounts & sync settings panel, touch your Facebook account.
5. Touch **Remove Account**.
6. From the confirmation panel, touch the **Remove Account** button.

Chapter 14: Managing your Email accounts

Use the procedures in this section to add a Microsoft Exchange account and a Gmail account to the Avaya A175 Desktop Video Device.

Adding a Microsoft Exchange account

Before performing this procedure, make sure:

- you have a Microsoft Exchange account on your company's email server
- you know your login and password for this account
- ActiveSync is enabled for your Microsoft Exchange account. Consult your system administrator.

1. Touch the Applications fan title to display the Applications fan menu.
2. On the Applications fan menu, touch **Settings**.
3. From the Settings panel, touch **Accounts & sync**.
4. From the Accounts & sync settings panel, touch **Add Account**.
5. From the Add an account panel, touch **Exchange**.
6. In the Email address box, enter your Exchange email address (for example, `jsmith@yourcompany.com`.
7. In the Password box, enter the password for this account.
8. If you want this email account to be your default account (if you configured a Gmail account), enable the **Send email from this account by default** check box.
9. Touch the **Next** button.
10. In the Server settings panel, make sure the correct information is displayed in the Server box.
11. Make sure the correct setting is displayed for the **Use secure connection (SSL)** check box.
12. Make sure the correct setting is displayed for the **Accept all SSL certificates** check box.
13. Touch the **Next** button.

14. In the Account options panel, verify your settings, and touch the **Next** button.
15. If you want to provide a name for this account, enter the name in the Give this account a name box.
16. In the Your name box, specify how you want your name to be displayed on outgoing messages from this email account, and then touch the **Next** button.
17. Touch the **Login** button.

Adding a Gmail account

Before performing this procedure, make sure you:

- have a Gmail account
- know your login and password for this account

1. Touch the Applications fan title to display the Applications menu fan.
2. On the Applications menu fan, touch **Settings**.
3. From the Settings panel, touch **Accounts & sync**.
4. From the Accounts & sync settings panel, touch **Add Account**.
5. In the Add an account panel, touch **Gmail**.
6. In the Email address box, enter your Gmail address (for example, `jsmith@gmail.com`.
7. In the Password box, enter the password for this account.
8. If you want this email account to be your default account (if you configured an Exchange account), enable the **Send email from this account by default** check box.
9. Touch the **Next** button.
10. In the Server box of the Server settings panel, enter `m.google.com`.
11. Make sure the **Use secure connection (SSL)** check box is enabled.
12. Make sure the **Accept all SSL certificates** check box is enabled.
13. Touch the **Next** button.
14. In the Account options panel, select the appropriate settings for this account.
15. Touch the **Next** button.

16. If you want to provide a name for this account, enter the name in the Give this account a name box.
17. In the Your name box, specify how you want your name to be displayed on outgoing messages from this email account, and then touch the **Done** button.

Changing the password for your email account

1. Perform one of the following steps:
   - Touch on the Top bar.
   - Touch the Applications fan title to display the Applications menu, and then touch **Email**.

   If you have one email account configured, the Inbox panel appears, displaying your messages.

   If you have configured both a Microsoft Exchange email account and a Gmail account, the Combined Inbox panel appears, displaying both email accounts. Touch the appropriate account. The Inbox panel appears for the selected account.
2. From the Inbox panel, touch the **Menu** button, and then touch the **Account settings** button at the bottom of the panel.
3. From the Account settings panel, touch **Incoming settings**.
4. In the Password box, enter your new password.
5. Touch the **Next** button.

Changing the settings for your email account(s)

You can change the following settings for each email account:

- the name you assigned to this email account (Account name)
- the name you want displayed in outgoing email messages from this account (Your name)
- the frequency at which the Avaya A175 Desktop Video Device will automatically check the email server for new messages (Email check frequency)
- the time period at which you want messages synchronized between the Avaya A175 Desktop Video Device and the email server (Amount to synchronize)

- whether this account is the default email account (Default account)
- whether you want the Avaya A175 Desktop Video Device to display a notification on the Top bar when email arrives (Email notifications)
- the server settings, such as login, password, address, etc. (Incoming settings)
- whether you want the Avaya A175 Desktop Video Device to synchronize its contacts for this account with the contacts on the email server (Sync contacts)
- whether you want the Avaya A175 Desktop Video Device to synchronize its calendar with the calendar on the email server (Sync calendar)

1. Perform one of the following steps:
   - Touch on the Top bar.
   - Touch the Applications fan title to display the Applications fan menu, and then touch **Email**.

   If you have one email account configured, the Inbox panel appears, displaying your messages.

   If you have configured both a Microsoft Exchange email account and a Gmail account, the Combined Inbox panel appears, displaying both email accounts. Touch the appropriate account. The Inbox panel appears for the selected account.
2. From the Inbox panel, touch the **Menu** button, and then touch the **Account settings** button at the bottom of the screen.
3. From the Account settings panel, make your changes.

Accessing your email account(s)

Prerequisites

Before performing this procedure, make sure you already configured a Microsoft Exchange email account and/or a Gmail account. See Adding a Microsoft Exchange account on page 71 and Adding a Gmail account on page 72 for more information.

1. Perform one of the following steps:
   - Touch on the Top bar.
   - Touch the Applications fan title to display the Applications fan menu, and then touch **Email**.

If you have one email account configured, the Inbox panel appears, displaying your messages.

If you have configured both a Microsoft Exchange email account and a Gmail account, the Combined Inbox panel appears, displaying both email accounts. Touch the account you want to access. The Inbox panel appears for the selected account. If you want to view the Inbox messages from both accounts in one panel, touch **Combined Inbox** at the top of the Email panel.

2. From the Inbox panel, perform one of the following steps:
   - If you want to view a message, touch the appropriate message.
   - If you want to compose a new message, view your folders, or modify your email account settings, touch the **Menu**, and then touch the appropriate button.

Composing an email message

1. Perform one of the following steps:
   - Touch on the Top bar.
   - Touch the Applications fan title to display the Applications fan menu, and then touch **Email**.

   If you have one email account configured, the Inbox panel appears, displaying your messages.

   If you have configured both a Microsoft Exchange email account and a Gmail account, the Combined Inbox panel appears, displaying both email accounts. Touch the account from which you want to send a new email. The Inbox panel appears for the selected account. If you do not specify an account, the Avaya A175 will send the email from your default account.
2. From the Inbox panel, touch the **Menu** button.
3. Touch the **Compose** button at the bottom of the screen.
4. In the Compose panel, enter your message. If you want to add the Cc/Bcc fields and/or attach a file to this message, touch the **Menu** button, and then touch the appropriate buttons at the bottom of the screen.
5. When finished, touch the **Send** button.

Composing an email message to a contact

1. From the Contacts fan menu, touch the appropriate contact card.
2. Perform one of the following steps:
   - On the contact's card, touch to use the default email address for this contact.
   - On the contact's card, touch and hold to display the contact's email addresses, and then touch the email address you want to use.
3. In the Compose panel, enter your message. If you want to add the Cc/Bcc fields and/or attach a file to this message, touch the **Menu** button, and then touch the appropriate buttons at the bottom of the panel.
4. When finished, touch the **Send** button.

Replying to an email message

1. Perform one of the following steps:
   - Touch on the Top bar.
   - Touch the Applications fan title to display the Applications fan menu, and then touch **Email**.

   If you have one email account configured, the Inbox panel appears, displaying your messages.

   If you have configured both a Microsoft Exchange email account and a Gmail account, the Combined Inbox panel appears, displaying both email accounts. Touch the account that contains the email message to which you want to reply. The Inbox panel appears for the selected account.
2. From the Inbox panel, touch the email message to which you want to reply.
3. Perform one of the following steps:
   - If you want to reply to only the sender, touch the **Reply** button at the bottom of the screen.

- If you want to reply to all email addresses on this message, touch the **Reply All** button at the bottom of the screen.

4. In the Compose panel, enter your message. If you want to add the Cc/Bcc fields and/or attach a file to this message, touch the **Menu** button, and then touch the appropriate buttons at the bottom of the screen.
5. When finished, touch the **Send** button.

Forwarding an email message

1. Perform one of the following steps:
   - Touch on the Top bar.
   - Touch the Applications fan title to display the Applications fan menu, and then touch **Email**.

   If you have one email account configured, the Inbox panel appears, displaying your messages.

   If you have configured both a Microsoft Exchange email account and a Gmail account, the Combined Inbox panel appears, displaying both email accounts. Touch the account that contains the email you want to forward. The Inbox panel appears for the selected account.
2. From the Inbox panel, touch the email message you want to forward.
3. Touch the **Menu** button, and then touch the **Forward** button at the bottom of the screen.
4. In the Compose panel, enter your message. If you want to add the Cc/Bcc fields and/or attach a file to this message, touch the **Menu** button, and then touch the appropriate buttons at the bottom of the screen.
5. When finished, touch the **Send** button.

Deleting an email message

1. Perform one of the following steps:

- Touch on the Top bar.
- Touch the Applications fan title to display the Applications fan menu, and then touch **Email**.

If you have one email account configured, the Inbox panel appears, displaying your messages.

If you have configured both a Microsoft Exchange email account and a Gmail account, the Combined Inbox panel appears, displaying both email accounts. Touch the account that contains the email you want to delete. The Inbox panel appears for the selected account.

2. From the Inbox panel, touch the email message you want to delete.
3. Touch the **Delete** button at the bottom of the screen.

Accessing your email folders

1. Perform one of the following steps:
   - Touch on the Top bar.
   - Touch the Applications fan title to display the Applications fan menu, and then touch **Email**.

   If you have one email account configured, the Inbox panel appears, displaying your messages.

   If you have configured both a Microsoft Exchange email account and a Gmail account, the Combined Inbox panel appears, displaying both email accounts. Touch the appropriate account. The Inbox panel appears for the selected account.
2. From the Inbox panel, touch the **Menu** button, and then touch the **Folders** button at the bottom of the screen.
3. From the Mailbox panel, touch the appropriate folder.

Removing your Microsoft Exchange account

Perform this procedure if you no longer want to access your Microsoft Exchange account from the Avaya A175 Desktop Video Device.

Note:
When you remove your Microsoft Exchange account from the Avaya A175 Desktop Video Device, all of the email and contacts in this account are deleted from the Avaya A175 Desktop Video Device.

1. Touch the Applications fan title to display the Applications fan menu.
2. On the Applications fan menu, touch **Settings**.
3. From the Settings panel, touch **Accounts & sync**.
4. From the Manage accounts section of the Accounts & sync settings panel, touch your Microsoft Exchange account.
5. Touch **Remove Account**.
6. From the confirmation panel, touch the **Remove Account** button.

Removing your Gmail account

Perform this procedure if you no longer want to access your Gmail account from the Avaya A175 Desktop Video Device.

Note:
When you remove your Gmail account from the Avaya A175 Desktop Video Device, all of the email and contacts in this account are deleted from the Avaya A175 Desktop Video Device.

1. Touch the Applications fan title to display the Applications fan menu.
2. On the Applications fan menu, touch **Settings**.
3. From the Settings panel, touch **Accounts & sync**.
4. From the Manage accounts section of the Accounts & sync settings panel, touch your Gmail account.
5. Touch **Remove Account**.
6. From the confirmation panel, touch the **Remove Account** button.

Chapter 15: Searching for information

Using the Avaya A175 Desktop Video Device, you can perform two types of searches:

- a global search, which searches all of your contacts, your public directory (if configured), and the internet
- a search of your contacts

Performing a global search

Use this procedure to search the following sources:

- all of your contacts
- your public directory (if configured). See Setting up access to a public LDAP directory on page 83.
- the internet

1. Touch on the Top bar.
2. In the text box, enter the information you want to find.
   As you enter each letter in the Search text box, the Avaya A175 Desktop Video Device displays whatever matches it finds.

   Please note the following:

   - Matches found on the internet will have the search icon next to them. If you touch an internet match, the browser automatically launches and displays the corresponding information for the selected item.
   - Matches found in your contact accounts will display the picture of the contact (if available).
   - Matches found in your public directory will have a contact icon next to them. If you touch a public directory match, the Contact panel appears, displaying the Details tab. If you want to save this contact, touch the **+Contacts** button, and then click **Create new contact** in the Contacts panel.

Searching for information in your contacts

Use this procedure to search for information in your contacts. You can search all your contacts or just a specific contact source (for example, Facebook).

1. Touch the Contacts fan title to display the Contacts search button.
   The search button appears under the Contact fan title. By default, **All Contacts** is displayed.
2. Perform one of the following steps:
   - If you want to search all your contacts, go to Step 3.
   - If you want to search a specify contact source (for example, Facebook), touch the **All Contacts** tab, and then touch the appropriate contact source.
3. Touch .
4. In the text box, enter the information you want to find.
   As you enter each letter in the Search text box, the Avaya A175 Desktop Video Device displays the card(s) that contain matching information.

Chapter 16: Using a public LDAP directory

Use the procedure in this section to manually configure the Avaya A175 Desktop Video Device to search a public LDAP directory.

Setting up access to a public LDAP directory

Use this procedure to manually configure Avaya A175 Desktop Video Device to search a public LDAP directory. You must know the following information for the LDAP directory:

- server address
- port number of the server
- search root
- search time
- LDAP attribute for full name search
- LDAP attribute for first name search
- LDAP attribute for last name search
- LDAP attribute for phone number
- LDAP attribute for mobile number
- LDAP attribute for email
- LDAP attribute for user handle
- LDAP attribute for company name
- LDAP attribute for location
- username and password for the server

1. Touch the Applications fan title to display the Applications fan menu.
2. On the Applications fan menu, touch **Settings**.
3. On the Settings panel, touch **Directory Login**.
4. On the Directory Login settings panel, touch **LDAP Directory Options**.
5. On the LDAP Directory Options panel, touch **LDAP Directory Server Address**.
6. Enter the address of the LDAP directory server, and then touch the **Save** button.
7. On the LDAP Directory Options panel, touch **Port**.

8. Enter the port number, and then touch the **Save** button.
9. On the LDAP Directory Options panel, touch **Search Root**.
10. Enter the search root. An example is `ou=people, o=company.com`.
11. Touch the **Save** button.
12. On the LDAP Directory Options panel, touch **Search Time**.
13. Enter the timeout interval, and then touch the **Save** button.
14. On the LDAP Directory Options panel, touch **Full Name**.
15. Enter the attribute for full name search, and then touch the **Save** button.
16. On the LDAP Directory Options panel, touch **First Name**.
17. Enter the attribute for first name search, and then touch the **Save** button.
18. On the LDAP Directory Options panel, touch **Last Name**.
19. Enter the attribute for last name search, and then touch the **Save** button.
20. On the LDAP Directory Options panel, touch **Phone Number**.
21. Enter the LDAP attribute for phone number, and then touch the **Save** button.
22. On the LDAP Directory Options panel, touch **Mobile**.
23. Enter the LDAP attribute for mobile number, and then touch the **Save** button.
24. On the LDAP Directory Options panel, touch **Mail**.
25. Enter the LDAP attribute for email, and then touch the **Save** button.
26. On the LDAP Directory Options panel, touch **User Handle**.
27. Enter the LDAP attribute for user handle, and then touch the **Save** button.
28. On the LDAP Directory Options panel, touch **Company Name**.
29. Enter the LDAP attribute for company name, and then touch the **Save** button.
30. On the LDAP Directory Options panel, touch **Location**.
31. Enter the LDAP attribute for location, and then touch the **Save** button.
32. On the LDAP Directory Options panel, touch **LDAP Directory Credentials**.
33. In the Username box, enter the user name (if required).
34. In the Password box, enter the password (if required).
35. Touch the **Save** button.
36. Touch **X** to close the menu.

Chapter 17: Using the web browser

Use the procedures in this section to use the web browser from the Avaya A175 Desktop Video Device. This includes procedures such as opening and closing a browser window, bookmarking a web page, viewing your browser history, and changing your browser settings.

Starting the browser

1. Touch the Applications fan title to display the Applications fan menu.
2. On the Applications fan menu, touch **Browser**.

Entering a web address

1. In the browser, touch the **URL** box.
2. In the Search or type URL box, enter the web address.
3. Touch the **Go** button.

Opening another browser window

1. In the browser window, touch the **Menu** button.
2. Touch the **New window** button at the bottom of the screen.

Changing browser windows

Perform this procedure to move from one browser window to another.

1. In the browser window, touch the **Menu** button.
2. Touch the **Windows** button at the bottom of the screen.
3. Touch the browser window you want to view.

Closing a browser window

Perform this procedure if you have multiple browser windows open and you want to close one of those windows.

1. In the browser window, touch the **Menu** button.
2. Touch the **Windows** button at the bottom of the screen.
3. Touch the **X** button for the browser window you want to close.

Exiting the browser

To exit the browser, touch the **X** in the browser title bar.

Refreshing a web page

1. In the browser window, touch the **Menu** button.
2. Touch the **Refresh** button at the bottom of the screen.

Bookmarking a web page

1. In the browser window, touch the **Bookmark** button.
2. Touch **Add** for the selected web page.
3. Make your changes (if any) for this bookmark in the Add bookmark panel.
4. When finished, touch the **OK** button.

Viewing your bookmarks

1. In the browser window, touch the **Bookmark** button.
2. Touch the bookmark of the page you want to view.

Viewing your most visited sites

1. In the browser window, touch the **Bookmark** button.
2. Touch the **Most visited** tab.

Viewing your browsing history

1. In the browser window, touch the **Bookmark** button.
2. Touch the **History** tab.

About the browser settings

You can change the following settings for the browser:

- Page content settings
- Privacy settings
- Security settings
- Advanced settings

Changing the page content settings for the browser

You can change the following page content settings for the browser:

- Text size
- Default zoom
- Show an overview of newly opened pages
- Text encoding

- Block pop-up windows
- Display images on web pages
- Auto-fit pages
- Landscape-only display
- Enable JavaScript
- Enable plug-ins
- Open new windows behind the current one
- Set your home page

1. Start the browser.
2. In the browser window, touch the **Menu** button.
3. Touch the **More** button at the bottom of the screen.
4. Touch **Settings**.
5. Make your changes.
6. When finished, click **X**.

Changing the privacy settings for the browser

You can change the following privacy settings for the browser:

- Clear locally cached content and databases
- Clear the browser navigation history
- Allow sites to save and read “cookie” data
- Clear all browser cookies
- Remember all data that you type in forms for later use
- Clear all the saved form data
- Allow sites to request access to your location
- Clear location access for all websites

1. Start the browser.
2. In the browser window, touch the **Menu** button.
3. Touch the **More** button at the bottom of the screen.
4. Touch **Settings**.

5. Make your changes.
6. When finished, click **X**.

Changing the security settings for the browser

You can change the following security settings for the browser:

- Remember passwords
- Clear passwords
- Show security warnings

1. Start the browser.
2. In the browser window, touch the **Menu** button.
3. Touch the **More** button at the bottom of the screen.
4. Touch **Settings**.
5. Make your changes.
6. When finished, click **X**.

Changing the advanced settings for the browser

You can change the following advanced settings for the browser:

- View advanced settings for individual websites
- Reset all browser settings to default

1. Start the browser.
2. In the browser window, touch the **Menu** button.
3. Touch the **More** button at the bottom of the screen.
4. Touch **Settings**.
5. Make your changes.
6. When finished, click **X**.

Chapter 18: Using an SD card

You can use an SD card to move files onto and off of the Avaya A175 Desktop Video Device.

Installing an SD card

1. Lift up the rubber cover of the SD port along the top of the Avaya A175 Desktop Video Device.

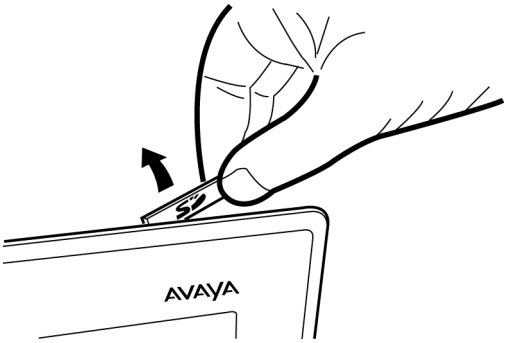

2. Insert the SD card into the port, and push it down into place.

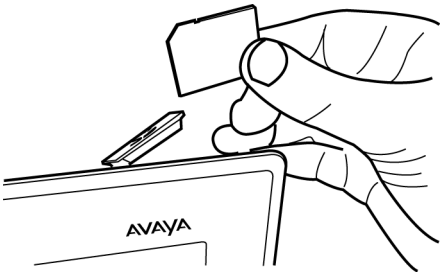

3. Place the rubber cover over the port.

Chapter 19: Using the calendar

Use the procedures in this section to use the calendar from the Avaya A175 Desktop Video Device. If you configured access to your Microsoft Exchange account, you can view and manage your Exchange calendar from the Avaya A175 Desktop Video Device.

Viewing a scheduled event

Prerequisites

You must have configured a Microsoft Exchange account.

1. Touch the Applications fan title to display the Applications shortcut menu.
2. On the Applications shortcut menu, touch **Calendar**.
   The Calendar fan displays today's events.
3. Perform one of the following steps:
   - If you want to view each day as a card, touch **Today**, and then touch **Days**.
   - If you want to view each week as a card, touch **Today**, and then touch **Weeks**.
   - If you want to view each month as a card, touch **Today**, and then touch **Months**.

   The Calendar panel appears. The Calendar fan displays the calendar in the increment you specified (that is, days, weeks, or months).
4. From the Calendar panel, touch the event you want to view.
   The Event panel appears, displaying the information for the selected event.

Viewing your next scheduled event

Prerequisites

You must have configured a Microsoft Exchange account.

Touch the Next Meeting notification in the middle of the Top bar. If there are multiple meeting notifications displayed, touch the appropriate event.
The Event panel appears, displaying the information for the selected event.

Adding an event

Prerequisites

You must have configured a Microsoft Exchange account.

1. Touch the Applications fan title to display the Applications shortcut menu.
2. On the Applications shortcut menu, touch **Calendar**.
   The Calendar fan displays today's events.
3. Touch the **Add+** button at the bottom of the screen.
   The Event details panel appears.
4. Complete the Event details panel.
5. When finished, touch the **Done** button at the bottom of the panel.

Modifying an event

Prerequisites

You must have configured a Microsoft Exchange account.

1. Touch the Applications fan title to display the Applications fan menu.
2. From the Applications fan menu, touch **Calendar**.
   The Calendar fan displays today's events.
3. Perform one of the following steps:
   - If you want to view each day as a card, touch **Today**, and then touch **Days**.

- If you want to view each week as a card, touch **Today**, and then touch **Weeks**.
- If you want to view each month as a card, touch **Today**, and then touch **Months**.

The Calendar panel appears. The Calendar fan displays the calendar in the increment you specified (that is, days, weeks, or months).

4. From the Calendar panel, touch the event you want to modify.
   The Event panel appears displaying the information for the selected event.
5. Touch the **Edit** button.
   The Event details panel appears.
6. Make your changes.
7. When finished, touch the **Done** button at the bottom of the panel.

Deleting an event

Prerequisites

You must have configured a Microsoft Exchange account.

1. Touch the Applications fan title to display the Applications shortcut menu.
2. On the Applications shortcut menu, touch **Calendar**.
   The Calendar fan displays today's events.
3. Perform one of the following steps:
   - If you want to view each day as a card, touch **Today**, and then touch **Days**.
   - If you want to view each week as a card, touch **Today**, and then touch **Weeks**.
   - If you want to view each month as a card, touch **Today**, and then touch **Months**.

   The Calendar panel appears. The Calendar fan displays the calendar in the increment you specified (that is, days, weeks, or months).
4. From the Calendar panel, touch the event you want to modify.
   The Event panel appears displaying the information for the selected event.
5. Touch the **Cancel Meeting** button.

The Delete panel appears.

6. Touch the **OK** button to delete the selected event.

Accessing the Top bar calendar

To access the Top bar calendar, touch the time and date in the Top bar.

Chapter 20: Accessing Liquid Decisions

The Avaya A175 Desktop Video Device gives you the opportunity to use Liquid Decisions Group Edition free of charge for your production data for a limited trial period. Liquid Decisions leverages business intelligence, sequenced applications and social networking to provide timely insights into your data. Liquid Decisions extends the capabilities of smart phones, tablets and desktops to deliver unified communications in context of business data.

For more information about Liquid Decisions, go to http://www.liquidanalytics.com.

1. Touch the Applications fan title to display the Applications fan menu.
2. On the Applications fan menu, touch **Liquid Decisions**.
   The Liquid Decisions window appears.
3. Touch the **Enter Community** button.
   The Terms of Service page appears.
4. Read the terms of service displayed on this page.
5. If you agree to the terms of service, touch the **Accept** button.
   The Welcome page appears.
6. Enter the appropriate information in the boxes on the Welcome page, and then touch the **Login** button.

Chapter 21: Accessing Quickoffice

The Avaya A175 Desktop Video Device provides Quickoffice, which allows business professionals to become truly mobile by allowing them to address real business requirements through fast, easy and reliable document viewing and editing. Quickoffice delivers complete mobile office support by allowing users to take their office documents with them on their Avaya A175 Desktop Video Device. Users can access, view, edit and share native Microsoft Word, Excel, and PowerPoint documents right from their Avaya A175 Desktop Video Device.

For more information, go to http://www.quickoffice.com.

1. Touch the Applications fan title to display the Applications fan menu.
2. On the Applications fan menu, touch **Quickoffice**.

   The first time you access Quickoffice, the Register your Software page appears. Enter the appropriate information on this page, and then touch the **Register Now** button.
3. On the Quickoffice page, touch the Quickoffice application you want to run.

Chapter 22: Accessing the calculator

1. Touch the Applications fan title to display the Applications fan menu.
2. On the Applications fan menu, touch **Calculator**.

Chapter 23: Modifying the settings of the Avaya A175 Desktop Video Device

Use the procedures in this section to:

- change your Unlock password
- run the Avaya A175 Desktop Video Device in low power mode
- select the language for the on-screen keyboard
- adjust the brightness of the display
- change the time format
- change the date format
- change the time zone
- change the animation settings
- erase all data from the Avaya A175 Desktop Video Device

Changing the Unlock password

1. Touch the Applications fan title to display the Applications fan menu.
2. On the Applications fan menu, touch **Settings**.
3. From the Settings panel, touch **Security**.
4. From the Security settings panel, touch **Device Unlock Password**.
   The Change Device Unlock Password panel appears.
5. In the Current password box, enter your current Unlock password.
6. In the New password box, enter your new password.
7. In the Confirm new password box, reenter your new password.
8. When finished, touch the **Save** button.

Running the Avaya A175 Desktop Video Device in low power mode

Perform this procedure if you are running the Avaya A175 Desktop Video Device on battery power, and you are concerned about conserving the battery.

When the Avaya A175 Desktop Video Device is running in low power mode, the display brightness is decreased.

1. Touch on the Top bar.
   The Battery Status panel displays the current status of the battery.
2. Touch **Low power mode**.
3. When finished, touch the **Done** button.

Selecting the language for the on-screen keyboard

1. Touch the Applications fan title to display the Applications fan menu.
2. On the Applications fan menu, touch **Settings**.
3. From the Settings panel, touch **Language & keyboard**.
4. From the Language & keyboard settings panel, touch **Android keyboard**.
5. From the Android keyboard settings panel, touch **Select input languages**.
6. From the Select input languages panel, touch the language(s) you want the on-screen keyboard to use.

Adjusting the display brightness

1. Touch the Applications fan title to display the Applications fan menu.
2. On the Applications fan menu, touch **Settings** .
3. From the Settings panel, touch **Display**.
4. From the Display settings panel, touch **Brightness**.
   The Brightness Control panel displays the current brightness setting.
5. Perform one of the following steps:
   - Move the slider to the left to decrease the brightness.
   - Move the slider to the right to increase the brightness.
6. When finished, touch the **Save** button.
7. When finished, touch **X**.

Changing the time format

Use this procedure to change the format of the time that is displayed on the Top bar. You can set the time to be displayed in a 12-hour or 24-hour format.

1. Touch the time or date on the Top bar.
2. Touch the **Settings** button.
3. From the Date & time settings panel, touch **Use 24-hour format**. When this check box is enabled, the time will be displayed in 24-hour format.
4. When finished, touch **X**.

Changing the date format

Use this procedure to change the format of the date that is displayed on the Top bar.

1. Touch the time or date on the Top bar.
2. Touch the **Settings** button.
3. From the Date & time settings panel, touch **Select date format**.
4. From the Select date format panel, select the format you want to use.
5. Touch **X**.

Changing the time zone

Use this procedure to change your time zone.

1. Touch the time or date on the Top bar.
2. Touch the **Settings** button.
3. From the Date & time settings panel, touch **Select time zone**.
4. From the Select time zone panel, select the time zone you want to use.
5. Touch **X**.

Changing the animation setting

Use this procedure to specify the animation setting.

1. Touch the Applications fan title to display the Applications fan menu.
2. On the Applications fan menu, touch **Settings**.

3. From the Settings panel, touch **Display**.
4. From the Display settings panel, touch **Animation**.
5. From the Animation panel, touch the appropriate setting. Your choices are:
   - No animations
   - Some animations
   - All animations
6. When finished, touch **X**.

Erasing all data from the Avaya A175 Desktop Video Device

This procedure erases all data from the Avaya A175 Desktop Video Device.

Note:
This procedure will not erase files on the SD card (if installed), current system software, and bundled applications.

1. Touch the Applications fan title to display the Applications fan menu.
2. On the Applications fan menu, touch **Settings**.
3. From the Settings panel, touch **Delete All Data**.
4. From the Delete All Data panel, touch **Factory data reset**.
   The Factory data reset panel appears.
5. Touch the **Reset phone** button to reset the Avaya A175 Desktop Video Device.

Chapter 24: Using Bluetooth devices with the Avaya A175 Desktop Video Device

Use the procedures in this section to:

- connect a Bluetooth device to the Avaya A175 Desktop Video Device
- disconnect a Bluetooth device from the Avaya A175 Desktop Video Device

Connecting a Bluetooth device to theAvaya A175 Desktop Video Device

1. Touch the Applications fan title to display the Applications fan menu.
2. On the Applications fan menu, touch **Settings**.
3. From the Settings panel, touch **Network & Wireless**.
4. From the Network & wireless settings panel, touch **Bluetooth settings**.
5. Make sure your Bluetooth device is turned on.
6. From the Bluetooth settings panel, touch **Scan for devices**.
   Once the Avaya A175 Desktop Video Device detects the Bluetooth device, the name of that device is displayed in the Bluetooth devices section of the Bluetooth settings panel.
7. In the Bluetooth devices section of the Bluetooth settings panel, touch the name of the Bluetooth device.
   Once the Avaya A175 Desktop Video Device connects to the selected device, “Connected” appears below the name of the Bluetooth device in the Bluetooth devices section of the Bluetooth settings panel.

Disconnecting a Bluetooth device from theAvaya A175 Desktop Video Device

1. Touch the Applications fan title to display the Applications fan menu.
2. On the Applications fan menu, touch **Settings**.
3. From the Settings panel, touch **Network & Wireless**.
4. From the Network & wireless settings panel, touch **Bluetooth settings**.
5. In the Bluetooth devices section of the Bluetooth settings panel, touch the name of the Bluetooth device you want to disconnect.
   A panel appears, prompting you to confirm your action.
6. Touch the **OK** button to disconnect the device.

Index

A

adjusting the display brightness 105
answering a call 31
Avaya A175 Desktop Video Device
  about 9
  base and handset 11
  configuring initially 17
  main screen 13
  online help 16
  side view 10
  turning off 15
  turning on 15
  wireless connection 22

B

battery 16, 104
Bluetooth devices 109, 110
bookmarking a web page 87
brower settings
  changing the page content settings 88
browser settings
  about 88
  changing the advanced settings 90
  changing the privacy settings 89
  changing the security settings 90
browser window
  changing 86
  closing 86
  exiting 86
  opening another 85

C

calculator
  accessing 101
calendar 93–96
  accessing 96
Call Forwarding feature 39
calls 25
changing browser windows 86
changing the animation setting 106
changing the date format 106
changing the time format 105
changing the time zone 106
changing the Unlock password 103
changing your availability
  presence 51
changing your status message 51
closing a browser window 86
conference 45
conferencing 43
conferencing a call 43, 46, 47
contacts 52, 55–60
  adding 55
  adding from a history record 56
  deleting 59
  merging 58
  modifying 56–58
  pictures 57
  separating 59
  tagging a contact as a favorite 60
  tracking presence 52, 60

D

disconnecting a call 33
disconnecting a conference 46, 48

E

EC500 40
EC500 feature 39
email accounts 73–78
entering a web address 85
entering digits during a call 33
erase data 107
exiting the browser 86

F

Facebook 67, 69
  adding an account 67
  viewing messages 69
forward calls 39

G

Gmail account
  adding 72

H

handset 36
handset volume 38
hanging up a call 33
hanging up a conference 46, 48
headset 36
headset volume 38
history 63
history records
    deleting 65
    viewing 63

I

ignoring an incoming call 32
IMs 49
instant messaging 49

K

keyboard 104

L

legal notices 2
Liquid Decisions
    accessing 97
log out 21
logging into the server 21
logging out of the server 21
login 21

M

managing contacts 55
managing history records 63
managing your Email account 71
managing your Facebook account 67
managing your presence status 51
Microsoft Exchange account
    adding 71
modifying settings 103
muting a call 34
muting a video call 34

O

online help
    accessing 16
opening another browser window 85

P

placing a call on hold 32
placing a conference on hold 44, 47
posting a message to a Facebook contact 68
posting a message to your wall on Facebook 68
presence 51
public LDAP directory
    setting up access 83

Q

Quickoffice
    accessing 99

R

refreshing a web page 87
removing your Facebook account 70
removing your Gmail account 79
removing your Microsoft Exchange account 78
replying to an instant message 50
resuming a call on hold 32
resuming a conference on hold 44, 47
ringer volume 37

S

SD card 91
searching for information 81, 82
Send All Calls 40
Send All Calls feature 39
sending an instant message 49
setting up access to a public LDAP directory 83
silencing 45
speaker 36
speaker volume 37
starting the browser 85

T

touch-tone digits 33
transferring a call 33

U

unlock 15
unmuting a call 34

unmuting a video call 35
unsilencing 45
using a public LDAP directory 83
using an SD card 91
using instant messaging 49
using the calendar 93
using the web browser 85

V

video
    changing the size of the panel 29, 35
video calls 25, 27–29, 64
    making a video call from a contact 28
    making a video call from a history record 29, 64
    making a video call using the keypad 27
viewing an incoming instant message 49
viewing your bookmarks 87
viewing your browsing history 88
viewing your most visited sites 88
voice calls 25, 26, 64
    making a voice call from a contact 26
    making a voice call from a history record 26, 64
    making a voice call using the keypad 25
voice mail 53