Using the Avaya E169 IP Media Station

Release 1.0
June 2014

© 2014 Avaya Inc.

All Rights Reserved.

Notice

While reasonable efforts have been made to ensure that the information in this document is complete and accurate at the time of printing, Avaya assumes no liability for any errors. Avaya reserves the right to make changes and corrections to the information in this document without the obligation to notify any person or organization of such changes.

Documentation disclaimer

“Documentation” means information published by Avaya in varying mediums which may include product information, operating instructions and performance specifications that Avaya may generally make available to users of its products and Hosted Services. Documentation does not include marketing materials. Avaya shall not be responsible for any modifications, additions, or deletions to the original published version of documentation unless such modifications, additions, or deletions were performed by Avaya. End User agrees to indemnify and hold harmless Avaya, Avaya's agents, servants and employees against all claims, lawsuits, demands and judgments arising out of, or in connection with, subsequent modifications, additions or deletions to this documentation, to the extent made by End User.

Link disclaimer

Avaya is not responsible for the contents or reliability of any linked websites referenced within this site or documentation provided by Avaya. Avaya is not responsible for the accuracy of any information, statement or content provided on these sites and does not necessarily endorse the products, services, or information described or offered within them. Avaya does not guarantee that these links will work all the time and has no control over the availability of the linked pages.

Warranty

Avaya provides a limited warranty on Avaya hardware and software. Refer to your sales agreement to establish the terms of the limited warranty. In addition, Avaya’s standard warranty language, as well as information regarding support for this product while under warranty is available to Avaya customers and other parties through the Avaya Support website: http://support.avaya.com or such successor site as designated by Avaya. Please note that if you acquired the product(s) from an authorized Avaya Channel Partner outside of the United States and Canada, the warranty is provided to you by said Avaya Channel Partner and not by Avaya.

Licenses

THE SOFTWARE LICENSE TERMS AVAILABLE ON THE AVAYA WEBSITE, HTTP://SUPPORT.AVAYA.COM/LICENSEINFO OR SUCH SUCCESSOR SITE AS DESIGNATED BY AVAYA, ARE APPLICABLE TO ANYONE WHO DOWNLOADS, USES AND/OR INSTALLS AVAYA SOFTWARE, PURCHASED FROM AVAYA INC., ANY AVAYA AFFILIATE, OR AN AVAYA CHANNEL PARTNER (AS APPLICABLE) UNDER A COMMERCIAL AGREEMENT WITH AVAYA OR AN AVAYA CHANNEL PARTNER. UNLESS OTHERWISE AGREED TO BY AVAYA IN WRITING, AVAYA DOES NOT EXTEND THIS LICENSE IF THE SOFTWARE WAS OBTAINED FROM ANYONE OTHER THAN AVAYA, AN AVAYA AFFILIATE OR AN AVAYA CHANNEL PARTNER; AVAYA RESERVES THE RIGHT TO TAKE LEGAL ACTION AGAINST YOU AND ANYONE ELSE USING OR SELLING THE SOFTWARE WITHOUT A LICENSE. BY INSTALLING, DOWNLOADING OR USING THE SOFTWARE, OR AUTHORIZING OTHERS TO DO SO, YOU, ON BEHALF OF YOURSELF AND THE ENTITY FOR WHOM YOU ARE INSTALLING, DOWNLOADING OR USING THE SOFTWARE (HEREINAFTER REFERRED TO INTERCHANGEABLY AS “YOU” AND “END USER”), AGREE TO THESE TERMS AND CONDITIONS AND CREATE A BINDING CONTRACT BETWEEN YOU AND AVAYA INC. OR THE APPLICABLE AVAYA AFFILIATE (“AVAYA”).

Avaya grants you a license within the scope of the license types described below, with the exception of Heritage Nortel Software, for which the scope of the license is detailed below. Where the order documentation does not expressly identify a license type, the applicable license will be a Designated System License. The applicable number of licenses and units of capacity for which the license is granted will be one (1), unless a different number of licenses or units of capacity is specified in the documentation or other materials available to you. “Software” means Avaya’s computer programs in object code, provided by Avaya or an Avaya Channel Partner, whether as stand-alone products, pre-installed , or remotely accessed on hardware products, and any upgrades, updates, bug fixes, or modified versions thereto. “Designated Processor” means a single stand-alone computing device. “Server” means a Designated Processor that hosts a software application to be accessed by multiple users. “Instance” means a single copy of the Software executing at a particular time: (i) on one physical machine; or (ii) on one deployed software virtual machine (“VM”) or similar deployment.

License types

Designated System(s) License (DS). End User may install and use each copy or an Instance of the Software only on a number of Designated Processors up to the number indicated in the order. Avaya may require the Designated Processor(s) to be identified in the order by type, serial number, feature key, Instance, location or other specific designation, or to be provided by End User to Avaya through electronic means established by Avaya specifically for this purpose.

Concurrent User License (CU). End User may install and use the Software on multiple Designated Processors or one or more Servers, so long as only the licensed number of Units are accessing and using the Software at any given time. A “Unit” means the unit on which Avaya, at its sole discretion, bases the pricing of its licenses and can be, without limitation, an agent, port or user, an e-mail or voice mail account in the name of a person or corporate function (e.g., webmaster or helpdesk), or a directory entry in the administrative database utilized by the Software that permits one user to interface with the Software. Units may be linked to a specific, identified Server or an Instance of the Software.

Copyright

Except where expressly stated otherwise, no use should be made of materials on this site, the Documentation, Software, Hosted Service, or hardware provided by Avaya. All content on this site, the documentation, Hosted Service, and the Product provided by Avaya including the selection, arrangement and design of the content is owned either by Avaya or its licensors and is protected by copyright and other intellectual property laws including the sui generis rights relating to the protection of databases. You may not modify, copy, reproduce, republish, upload, post, transmit or distribute in any way any content, in whole or in part, including any code and software unless expressly authorized by Avaya. Unauthorized reproduction, transmission, dissemination, storage, and or use without the express written consent of Avaya can be a criminal, as well as a civil offense under the applicable law.

Third Party Components

“Third Party Components” mean certain software programs or portions thereof included in the Software or Hosted Service may contain software (including open source software) distributed under third party agreements (“Third Party Components”), which contain terms regarding the rights to use certain portions of the Software (“Third Party Terms”). As required, information regarding distributed Linux OS source code (for those Products that have distributed Linux OS source code) and identifying the copyright holders of the Third Party Components and the Third Party Terms that apply is available in the Documentation or on Avaya’s website at: http://support.avaya.com/Copyright or such successor site as designated by Avaya. You agree to the Third Party Terms for any such Third Party Components

Note to Service Provider

The Product or Hosted Service may use Third Party Components subject to Third Party Terms that do not allow hosting and require a Service Provider to be independently licensed for such purpose. It is your responsibility to obtain such licensing.

Preventing Toll Fraud

“Toll Fraud” is the unauthorized use of your telecommunications system by an unauthorized party (for example, a person who is not a corporate employee, agent, subcontractor, or is not working on your company's behalf). Be aware that there can be a risk of Toll Fraud associated with your system and that, if Toll Fraud occurs, it can

result in substantial additional charges for your telecommunications services.

Avaya Toll Fraud intervention

If you suspect that you are being victimized by Toll Fraud and you need technical assistance or support, call Technical Service Center Toll Fraud Intervention Hotline at +1-800-643-2353 for the United States and Canada. For additional support telephone numbers, see the Avaya Support website: http://support.avaya.com or such successor site as designated by Avaya. Suspected security vulnerabilities with Avaya products should be reported to Avaya by sending mail to: securityalerts@avaya.com.

Trademarks

The trademarks, logos and service marks ("Marks") displayed in this site, the Documentation, Hosted Service(s), and Product(s) provided by Avaya are the registered or unregistered Marks of Avaya, its affiliates, or other third parties. Users are not permitted to use such Marks without prior written consent from Avaya or such third party which may own the Mark. Nothing contained in this site, the Documentation, Hosted Service(s) and Product(s) should be construed as granting, by implication, estoppel, or otherwise, any license or right in and to the Marks without the express written permission of Avaya or the applicable third party.

Avaya is a registered trademark of Avaya Inc.

Aura is a registered trademark of Avaya Inc.

Flare is a registered trademark of Avaya Inc.

one-X is a registered trademark of Avaya Inc.

All non-Avaya trademarks are the property of their respective owners. Linux® is the registered trademark of Linus Torvalds in the U.S. and other countries.

Downloading Documentation

For the most current versions of Documentation, see the Avaya Support website: http://support.avaya.com, or such successor site as designated by Avaya.

Contact Avaya Support

See the Avaya Support website: http://support.avaya.com for Product or Hosted Service notices and articles, or to report a problem with your Avaya Product or Hosted Service. For a list of support telephone numbers and contact addresses, go to the Avaya Support website: http://support.avaya.com (or such successor site as designated by Avaya), scroll to the bottom of the page, and select Contact Avaya Support.

Contents

Chapter 1: Introduction ... 6
Purpose ... 6
Intended audience ... 6
The Avaya E169 IP Media Station ... 7
Product compatibility ... 10
Related resources ... 11
Related documentation ... 11
Viewing Avaya Mentor videos ... 12
Support ... 12
Safety guidelines ... 12
Chapter 2: Hardware setup ... 14
Preparing the media station for installation ... 14
Media station rear panel connectors and controls ... 15
Positioning the media station ... 16
Connecting a smartphone ... 16
Connecting a tablet ... 20
Connecting the handset ... 22
Connecting to your network ... 23
Connecting to AC power ... 24
Chapter 3: Smart device and media station activation ... 26
Downloading the media station app ... 26
Turning on the media station ... 26
Connecting smart devices with Bluetooth pairing ... 27
Connecting the media station to a smart device as a USB accessory ... 28
Registering the media station app and signing in the first time ... 29
Media station registration ... 30
Adding or changing the voice mail telephone number ... 31
Chapter 4: Navigation ... 32
Displays ... 32
Caller ID support ... 32
Icons ... 32
Media station control button descriptions ... 32
Chapter 5: Operation ... 33
Calls ... 33
Making a call ... 33
Answering a call ... 34
Ending a call ... 35
Making a second call ... 35
Answering a second call ... 36

Transferring a call.... 37
Creating a conference call.... 37
Splitting a conference call.... 38
Switching between two calls.... 38
Calling the voice mail system.... 39
Contacts.... 39
Displaying and calling a contact.... 39
Accessing contacts during a call.... 39
Adding a contact to Favorites.... 40
Call history.... 40
Displaying recent calls.... 40
Making a call from the Recent Calls list.... 41
Deleting call history.... 41
Miscellaneous features.... 42
Changing the media station ring tone and other sounds.... 42
Adjusting the volume while on a call.... 42
Muting and unmuting the microphone.... 42
Changing the focus of the media station microphone.... 43
Listening to music from the smart device.... 43
Control of the audio stream.... 43
Transferring the audio output between the media station and a smart device.... 44
Signing into the app.... 45
Signing out from the app.... 46
Chapter 6: Maintenance.... 47
Updating the media station app.... 47
Removing and replacing a cable sleeve.... 47
Chapter 7: Troubleshooting.... 49
Frequently Asked Questions.... 49
Removing the Bluetooth connection.... 51
The media station app displays the Not Connected (Network) message.... 52
Resolving a Not Connected (Network) message.... 52

Chapter 1: Introduction

Purpose

This document describes how to use product features and capabilities.

Intended audience

This document is intended for people who want to learn how to use product features and capabilities.

The Avaya E169 IP Media Station

The Avaya E169 IP Media Station is a VoIP SIP deskphone with which you can use your smart device on your enterprise telephony system. The media station provides:

- A standalone SIP deskphone on your enterprise system
- Two functional line appearances that provide options to hold and set up a conference
- A charging station for your smart device

- A high-quality Bluetooth-enabled speakerphone
- The capability to make calls through a SIP line or through the smart device cellular network

Bring Your Own Device (BYOD)

The Avaya E169 IP Media Station supports the most popular iOS and Android smart devices that enterprise workers use. The media station facilitates enterprise-grade integration with Avaya Aura® Release 6.2 FP3 and later and Avaya IP Office Release 9.0.3 and later telephony servers.

The media station app can route calls over the wired SIP network of the telephony server or over the wireless network of the cellular carrier. Whether the calls route over SIP or the wireless network, the media station speakerphone or wired handset provides unmatched audio quality.

Bluetooth

You can connect your smart device to the media station using Bluetooth to provide a high-quality speakerphone when making calls on your device. You can also use Bluetooth for playing audio streams from your device. As with all Bluetooth devices, audio quality can vary based on the quality of the Bluetooth signal from the smart device.

Important:

You can pair many smart devices with a media station, but only one can be active at a time.

High-quality sound

The speakerphone and microphones on the media station provide unmatched sound quality. The media station has six broadband speakers, four digital microphones, and one passive radiator. This unique and innovative acoustic design uses the speakerphone in hands-free mode with unequaled quality. You can use the media station for large conference calls or listen to your music or podcasts.

These innovative technologies improve performance by using wide-band or high definition codec G. 722. Conventional telephony encodes speech at bandwidths ranging from 300 Hz to 3400 Hz. As a result, the media station only transmits the most essential part of the human voice. The media station encodes the human voice using bandwidths ranging to 8 kHz. These bandwidths also pick up voice harmonics: the natural quality of the human voice, a sense of the physical presence of the speaker, and the space around the person.

You can discern every nuance of the human voice. The media station reduces nasal sounds and you can discern similar sounding consonants such as S and F. You no longer need to repeat as your conferences are now crystal clear and stress-free.

Power to charge your smart devices

The media station uses Power over Ethernet (PoE) and an optional AC power adapter. With this power arrangement, you can charge your smart devices when you connect your devices to the media station.

Note:

Some smart devices require more charging power than the media station provides. Your smart device might charge slower than when connected to the native AC power adapter of the device. If the device does not charge well enough when connected to the media station, you must charge the device using the native AC power adapter.

Core telephony features

- Two functional line appearances

- Hold and resume
- Message waiting indicator and voice mail dial access button
- Transfer
- Three-way conference

Using Avaya softphone apps with the media station

Avaya supports a growing number of softphone applications for both iOS and Android platforms. Avaya Flare® Communicator for iPad Devices and Avaya Communicator for Android are examples of Avaya softphone apps.

If you are already a user of such an app, you can use this app with the media station in the following way:

- Create a Bluetooth pairing between the app and the media station.
- Connect your smart device over Bluetooth or USB to the media station when you want to use it as your audio device.

Interactions with other Avaya apps

Avaya recommends that you only use one Avaya app at a time because of interactions between the apps.

The media station operates as a Bluetooth speakerphone for Avaya Flare® Communicator for iPad Devices, Avaya one-X® Communicator, and other Avaya mobile apps. The media station does not support native call control of those apps.

When the media station detects registration from two different Avaya apps, the media station automatically unregisters from the apps. You must manually register the media station. See the following scenario for this interaction:

1. You have an iPhone with the Avaya Media Station and Avaya one-X® Mobile apps installed.
2. You connect the device to the media station with the Avaya Media Station app and you sign on with extension 1234.
3. The Avaya one-X® Mobile app attempts to register with the same extension.
4. The media station signs out from extension 1234 and the Avaya Media Station app opens on the smart device.
5. You sign in again to extension 1234 using the Avaya Media Station app.

When you have Avaya EC500 administered on a smartphone that you register with the media station, Avaya recommends that you disable Avaya EC500. If you do not disable Avaya EC500, the following might occur:

- You receive a SIP call on the media station at the same time you receive a cellular network call on your smartphone.
- If you try to answer the SIP call by pressing the **Call/Volume** button or picking up the handset, you connect to the cellular network call.
- This interaction occurs because the default smartphone app of iOS and Android devices put focus on the cellular call. This means that you cannot answer the SIP call when you also enable Avaya EC500 on the smartphone.

Sharing the same extension on softphone apps and the media station (Avaya Aura® only)

If you log on to the same extension on both your softphone app and the media station app, you will see the following behavior:

- When your smart device disconnects from the media station, the two endpoints operate independently and have a Multiple Device Access (MDA) relationship between them.
- When you connect your smart device to the media station with USB or Bluetooth, the media station automatically logs out, or unregisters, the registered extension. The message **Prevent Dual App** on both the handset and media station app.
- When you disconnect the smart device from the media station, the media station automatically logs on, or registers, with the previously provisioned extension.

Product compatibility

The media station operates on the most popular Avaya telephony servers, supports a wide array of smart devices, and supports a select set of USB headsets. Check the media station support site regularly for updates to the product compatibility with new smart devices and headsets.

Telephony servers

The media station operates with the following telephony servers:

- Avaya Aura® Release 6.2 FP3 and later
- Avaya IP Office Release 9.0.3 and later

Operating systems

The media station supports the following operating systems:

- iOS Version 6.0 and later
- Android Version 4.1–4.3, aka Jelly Bean
- Android Version 4.4, aka Kit Kat

Smart devices

The media station is compatible with the following products:

- iOS devices using software Version 6.0 and later, such as:
  - iPhone 5c
  - iPhone 5
  - iPhone 4S
  - iPhone 4
  - iPad 2
  - iPad Air
  - iPad Mini

- Android devices using software Version 4.1–4.3 (aka Jelly Bean) and 4.4 (aka KitKat), such as:
  - Samsung S3
  - Samsung S4
  - Samsung Note 3
  - Samsung Tab 2
  - Samsung Tab 3

Headsets

The media station is compatible with the following headsets:

- Jabra 9460 USB Headset
- Jabra 9470 USB Headset

Related resources

Related documentation

See the following related documents at support.avaya.com.

Title	Use this document to:	Audience
Overview		
Avaya IP Deskphone SIP E169 Media Station Overview and Specification	Get an understanding of the product and the features available to users.	Purchasers, implementers, users
Implementing		
Installing and Maintaining the Avaya IP Deskphone SIP E169 Media Station	Understand how to install, administer, and maintain the product.	Implementers, system administrators
Administering Avaya 9601/9608/9608G/9611G/9621G/ 9641G IP Deskphones SIP	Understand how to administer 9600-series deskphones, which is similar to how you administer the media stations.	Implementers, system administrators
Using		
Using the Avaya IP Deskphone SIP E169 Media Station	Learn how to install, use, and maintain the product.	Users
Avaya IP Deskphone SIP E169 Media Station Quick Reference	Learn how to use the key features of the product.	Users

Viewing Avaya Mentor videos

Avaya Mentor videos provide technical content on how to install, configure, and troubleshoot Avaya products.

About this task

Videos are available on the Avaya Support web site, listed under the video document type, and on the Avaya-run channel on YouTube.

Procedure

- To find videos on the Avaya Support web site, go to http://support.avaya.com, select the product name, and select the *videos* checkbox to see a list of available videos.
- To find the Avaya Mentor videos on YouTube, go to http://www.youtube.com/AvayaMentor and perform one of the following actions:
  - Enter a key word or key words in the Search Channel to search for a specific product or topic.
  - Scroll down Playlists, and click the name of a topic to see the available list of videos posted on the site.

Note:

Videos are not available for all products.

Support

Visit the Avaya Support website at http://support.avaya.com for the most up-to-date documentation, product notices, and knowledge articles. You can also search for release notes, downloads, and resolutions to issues. Use the online service request system to create a service request. Chat with live agents to get answers to questions, or request an agent to connect you to a support team if an issue requires additional expertise.

Safety guidelines

Required hardware power supply

The media station draws Power over Ethernet (PoE) through a compatible network or from a mains AC 100-240 V supply. If the media station draws power from a 100-240 V AC supply, the media station cannot operate without the power supply.

Warning

- Do not open the base, handset, or charger.
- Ensure that no liquid comes into contact with the product.

- Do not expose the device to excessive smoke, dust, mechanical vibration, or shock.
- Use only the cables, adapters, and batteries supplied.
- Put the media station near an accessible electrical outlet.
- Do not expose the device to excessive heat, for example, in direct sunlight or near heating equipment.

Operating and storage temperature

Use the device in a room where the temperature is always between 0 to 40º C or 32 to 104º F.

Chapter 2: Hardware setup

Preparing the media station for installation

Procedure

1. Remove the parts from the shipping box. Confirm that you have all parts shown in the following table.

Media station base	
Handset	
Handset cradle (packaged with the docking cradles and USB cables)	
AC adapter and adapter plugs	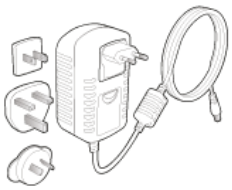
Apple Lightning, Apple 30-pin, and generic micro USB cables (packaged with the docking cradles and handset cradle) **Note:** The Apple 30-pin cable is incompatible with Android devices. You must provide your own Android 30-pin cable.	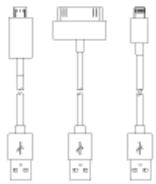

Cable sleeves for the Apple Lightning, Apple 30-pin, and generic micro USB cables (packaged with the USB cables and handset cradle) **Note:** Some Android 30-pin cables might not fit in the cable sleeve. In this case, connect your cable to the back of the media station and set your smart device on your desk.	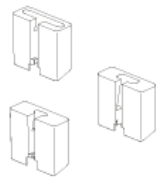
Docking cradles for the Apple Lightning, Apple 30-pin, and generic micro USB cables (packaged with the USB cables and handset cradle)	
Tablet bracket	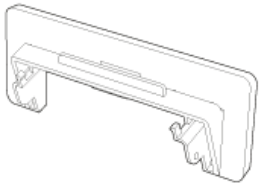

2. Remove any transparent protective film or packing materials from the parts.

Media station rear panel connectors and controls

Icon	Name	Description
	AC Power Input	The connector where you connect the AC power adapter.
	USB Connector (2)	The connectors where you connect USB devices.
	Computer Ethernet Port	The Ethernet connector where you connect a computer.
	Ethernet Port	The connector where you connect the media station to the network.
	Headset	The connector where you connect a headset. Not supported in Release 1.0.
	Power	The power button.

Positioning the media station

Procedure

Put the media station near the network socket and AC power socket.

For the best sound quality and microphone performance, avoid putting any objects within 8 inches or 20 centimeters of the media station. Comply with this requirement on all sides of the media station, especially the front of the media station.

Connecting a smartphone

Before you begin

Determine the USB cable that your smartphone requires:

- Apple Lightning
- Apple 30-pin
- Generic micro USB

Note:

If none of the USB cables provided with the media station fit your smartphone, you must use the USB cable that came with your smartphone. You might not be able to use the cable sleeve or the docking cradle when you use another USB cable.

Procedure

1. If using a smartphone that you plan to dock on the media station, assemble the cable that your device uses to the required cable sleeve.
   - For devices that use an Apple Lightning cable, insert the cable as shown in the figure with the side that has the raised key on the connector facing up. Slide the connector into the sleeve. The connector will not slide into the sleeve if you have the raised key facing down.

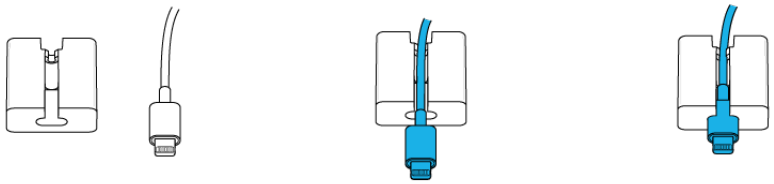

   - For devices that use an Apple 30-pin cable, insert the cable as shown in the figure with the side that has the raised key on the connector facing up. Slide the connector into the sleeve. The connector will not slide into the sleeve if you have the raised key facing down.

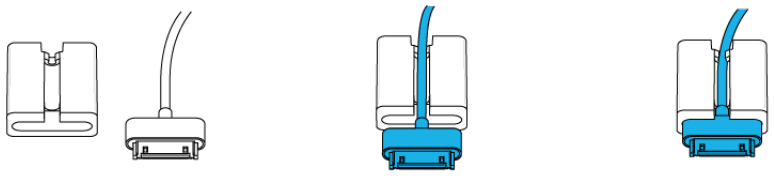

- For devices that use a micro USB cable, insert the cable as shown in the figure with the shorter-width side of the connector facing up. Slide the cable into the sleeve.

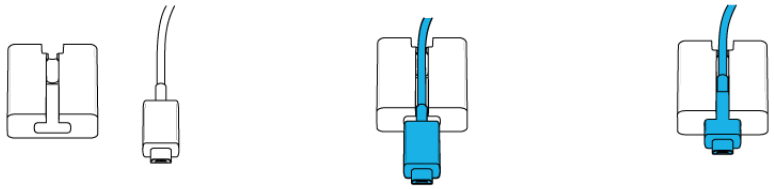

2. Insert the cable sleeve into the slot from the top of the media station.

Warning:

Ensure that you place the sleeve as shown in the following diagram. If you insert the sleeve the wrong way, the sleeve might get stuck in the media station.

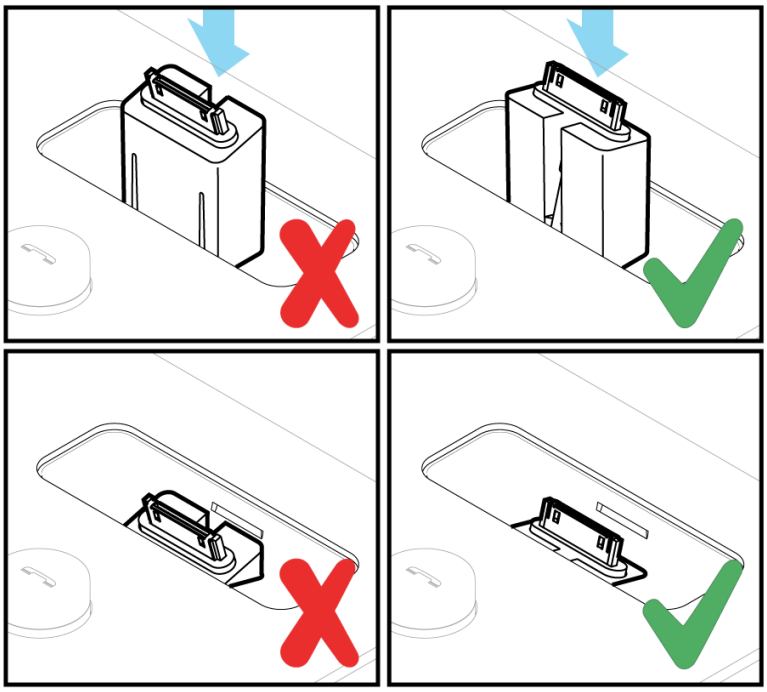

3. Route the USB cable under the media station and through the cable channels as shown in the following diagram.

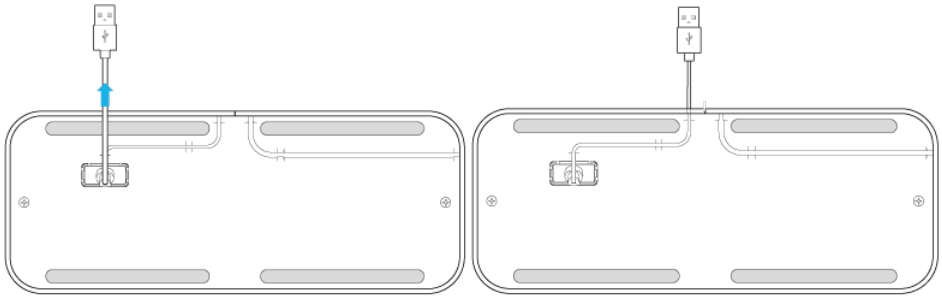

4. Plug the USB cable into the left USB port on the rear of the media station.

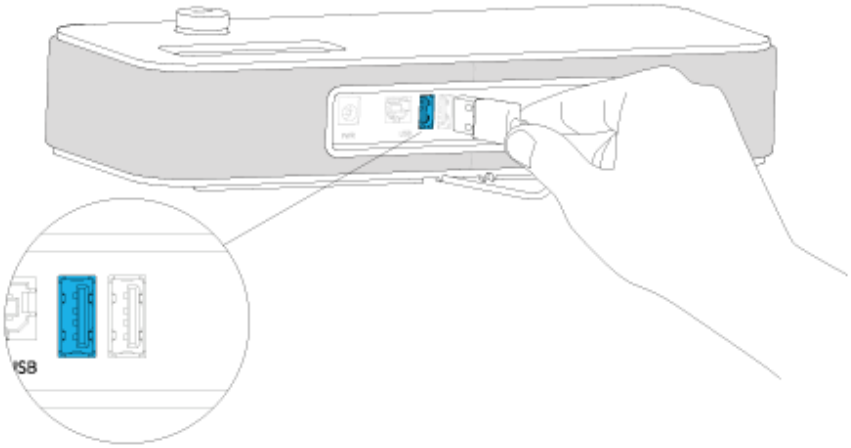

5. Insert the docking cradle into the base that matches the USB cable that you are using. If your smartphone has a case that does not fit in the cradle, do not install the cradle.

6. Plug your smartphone into the media station.

Important:

If your smartphone does not fit on the media station docking cradle, use the USB cable that came with your smartphone. Plug your smartphone into the USB port on the rear of the media station.

Connecting a tablet

Before you begin

Get the USB cable that came with your tablet.

About this task

Caution:

While connecting and installing your tablet, maintain a firm grip so that the tablet does not accidentally fall off the tablet bracket. When the tablet is on the bracket, the tablet is secure enough for normal use.

Tip:

To remove the tablet bracket, ensure that the power button is in the on position .

Procedure

1. Install the tablet bracket by gently rotating the bracket into position until you feel the bracket snap into position.

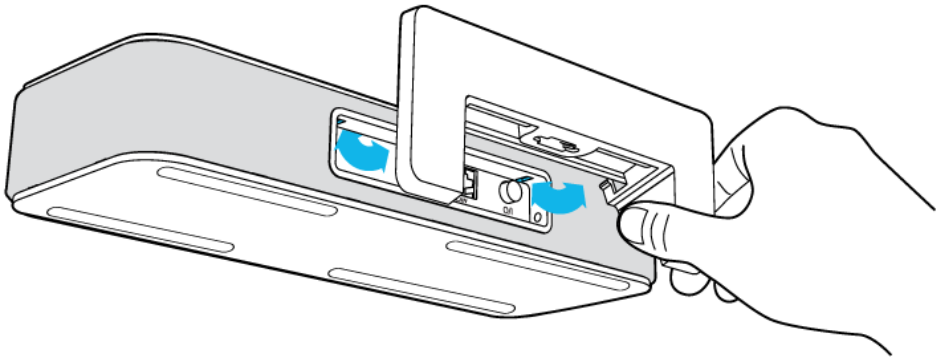

Important:

If you cannot push the power button or the bracket is not slanted, you did not install the bracket in the correct position. When removing the tablet bracket, grasp the bracket from the corners and gently rotate the bracket up and away from the media station. If you try to pull the tablet bracket straight out, you might damage the bracket.

2. Perform one of the following actions:
   - To install a tablet in a position where the USB cable power connector is pointing down into the bracket, route the USB cable through the tablet bracket and set the tablet on the bracket.
   - To install a tablet in a position where the USB power connector is not pointing down into the bracket, connect the USB cable of the device to the tablet and set the tablet in position on the bracket. This position is also useful if you plan to hold the tablet by hand on occasion.

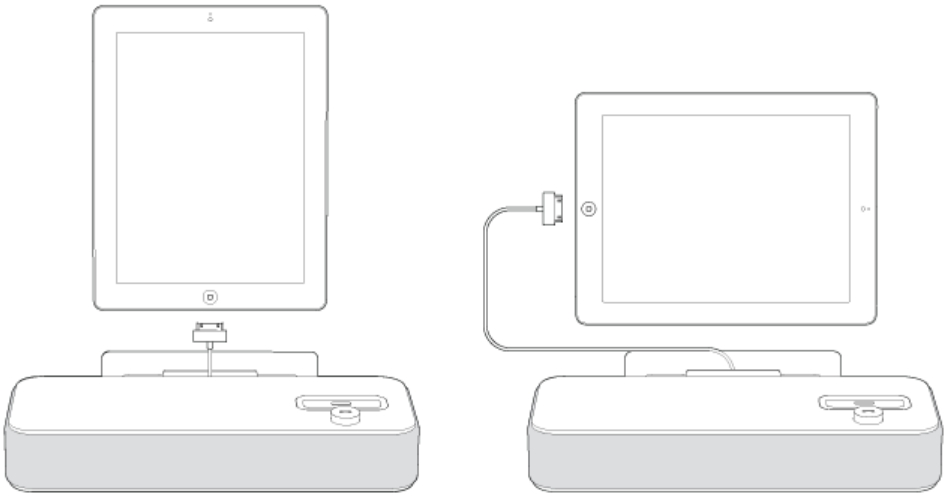

3. Plug the USB cable into the left USB port on the rear of the media station.

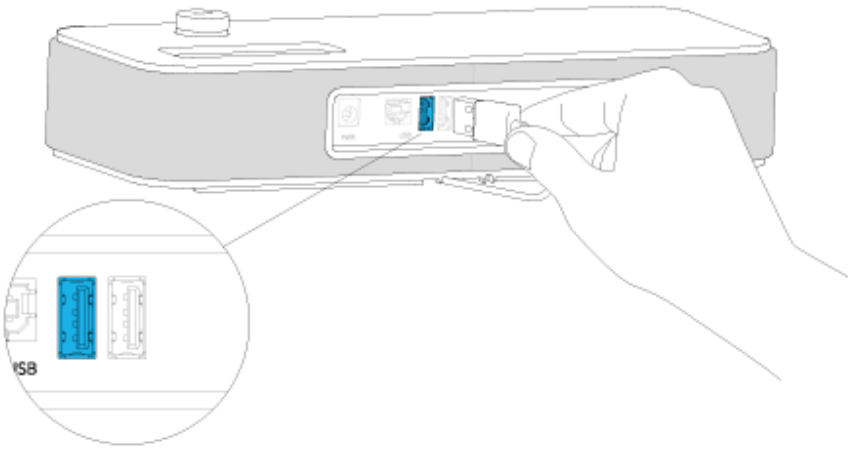

Connecting the handset

Procedure

1. Plug the handset cable into the right USB port on the rear of the media station. Route the cable through the channels under the media station.

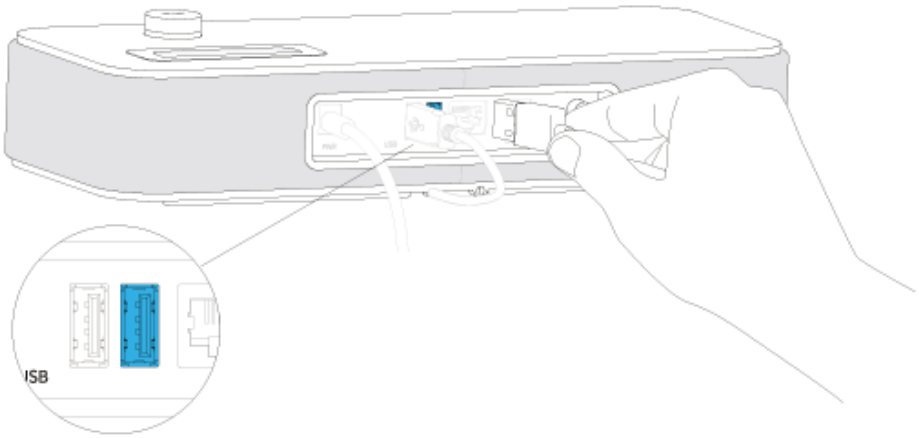

2. Put the handset cradle on top of the media station. Put the handset in the handset cradle. Position the cradle so that the magnets secure the holder on the media station.

Note:

If more convenient for you, you can put the handset cradle and handset on any location on your desk. Regardless of placement, the handset must rest in the handset cradle.

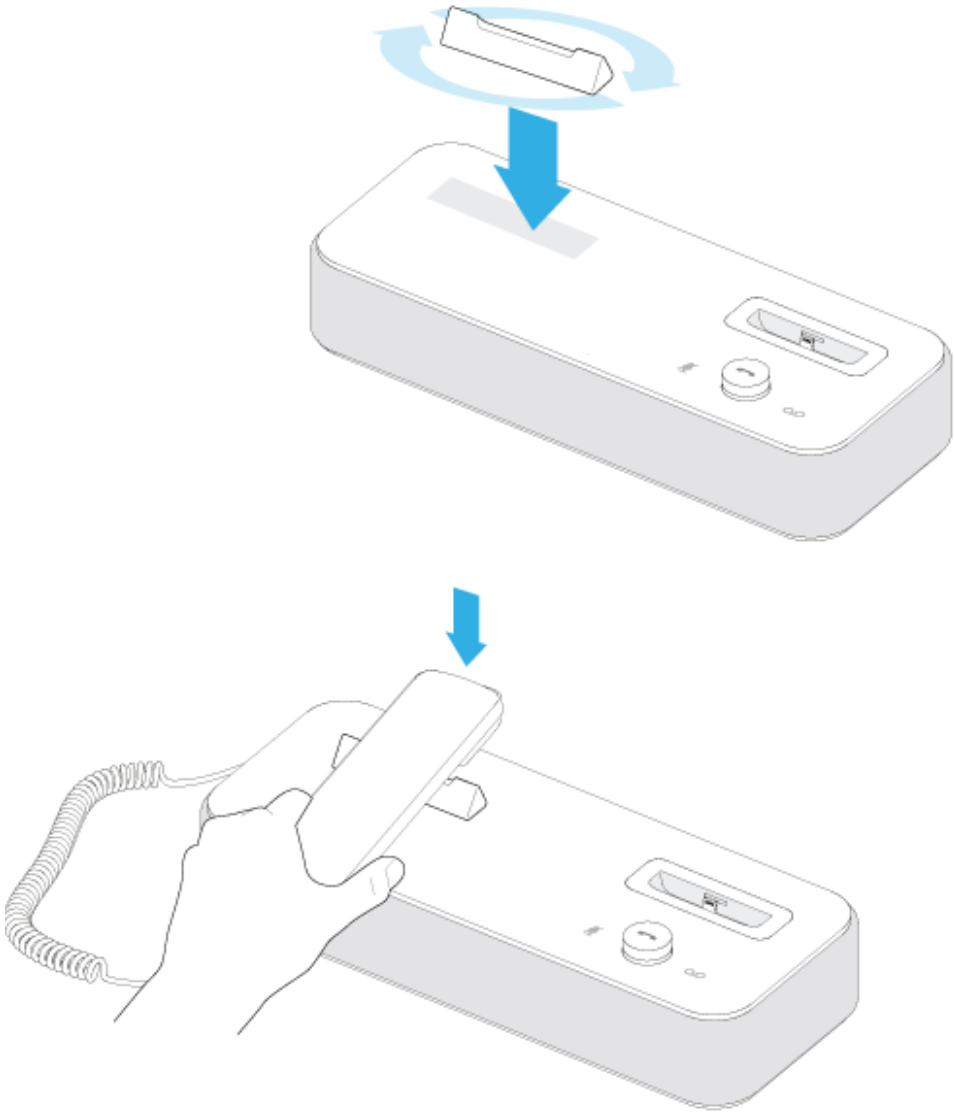

Important:

For the media station to recognize whether the handset is either on-hook or off-hook, you must use the handset cradle. If you misplace the handset cradle, you cannot use the handset and you must disconnect the handset until you get a new cradle. Contact Avaya support personnel to order a replacement cradle.

Connecting to your network

Before you begin

Get a CAT 5 Ethernet cable long enough to reach your Ethernet socket.

Procedure

1. Plug one end of an Ethernet cable into the LAN connector at the back of the media station. Plug the other end into the Ethernet network socket.

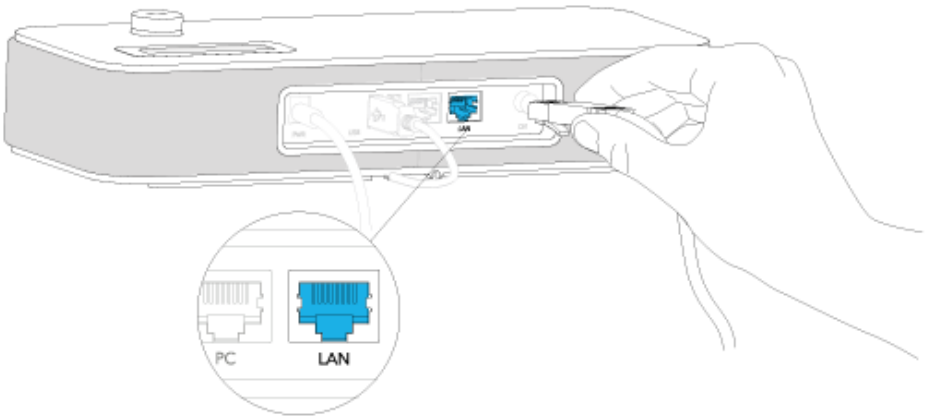

2. Optional. Plug one end of an Ethernet cable into the computer connector at the back of the media station. Plug the other end into the Ethernet connector on your PC. This connection provides a convenient way to connect your computer to your network.

Connecting to AC power

About this task

This task is optional.

Procedure

1. Connect the proper AC adapter plug type into the AC adapter.
2. Verify that the power button on the media station is in the off position before you plug in power.

3. Plug the AC power adapter into the AC input connector on the rear of the media station and into a wall mount socket.

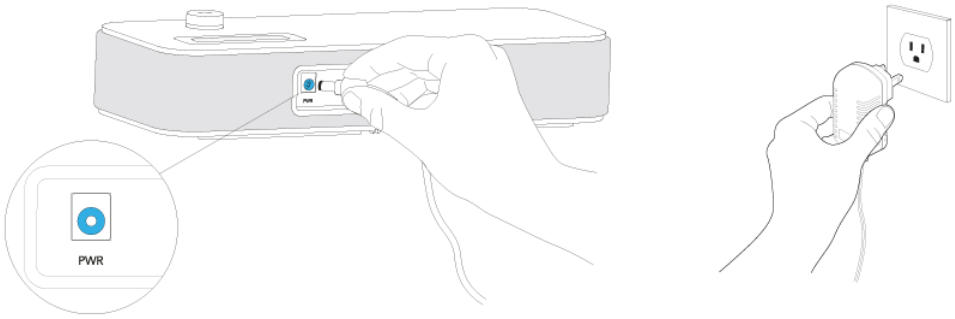

Next steps

Continue with Downloading the media station app on page 26.

Chapter 3: Smart device and media station activation

Downloading the media station app

You must download and install the media station app to fully support SIP line functionality on the media station. Other telephony applications can only use the media station as a Bluetooth speakerphone and cannot use the SIP capabilities of the Avaya telephony server.

To learn more about the app, go to the following websites:

- Apple App Store
- Google Play Store

Procedure

1. From your smart device, navigate to the Apple App Store or the Google Play Store.
2. Search for **avaya**.
3. Select the **Avaya Media Station** app.
4. Tap **FREE**.

   The icon changes to **INSTALL**.
5. Tap **INSTALL**.

   The media station app downloads and installs on your smart device.

Turning on the media station

Before you begin

- Assemble the media station and connect to the network. Connect to AC power if required.
- Download and install the Avaya E169 IP Media Station app.
- Verify administration of the SIP line with your system administrator.
- Connect your device to the media station.

Procedure

1. Turn on power to the media station.

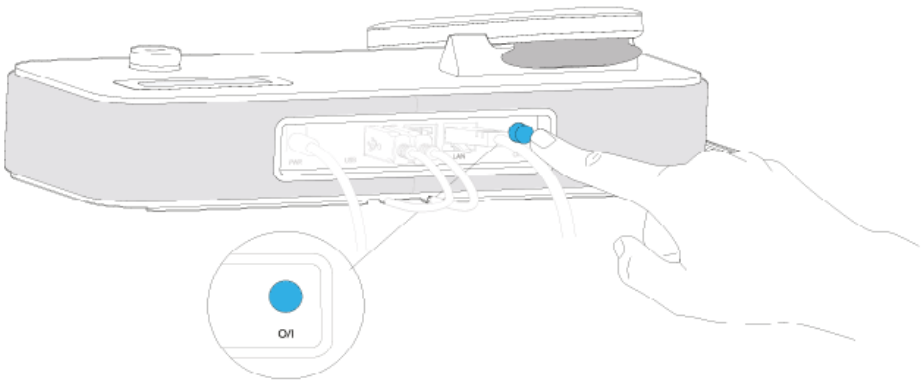

The following occurs when you apply power:

- The **Mute**, **Call/Volume**, and **Voice Mail** LEDs on the media station light up in that order, then go dark after a few seconds.
- You might get a “Trust this computer” query from your smart device. Accept the query.
- If you installed the app on a smart device and you connected the smart device to the media station with a USB cable, the app opens on the smart device.
- You might hear a beep and a pairing message from the media station.
- For an iOS device, the media station automatically attempts to pair using Bluetooth.
- For an Android device, you must initiate manual Bluetooth pairing.
- If not set on the handset cradle, the handset displays the message **Connecting**, followed by alternating displays of the current time and the SIP line telephone number.

2. If the media station app displays the message **Not Connected (Network)**, a network connection is not present. Troubleshoot the reason for no network connectivity. An **Offline (Disconnected)** message indicates that the account is not administered.

Connecting smart devices with Bluetooth pairing

Before you begin

Download and install the media station app as described in Downloading the media station app on page 26.

About this task

You must pair the smart device with the media station to create a logical connection with the media station app and the media station.

Connecting a smart device to the media station with Bluetooth is a one-time procedure. After pairing the first time, future connections happen automatically until you permanently remove the connection.

When you enable Bluetooth on the smart device, a connection occurs when the smart device is within range of the media station.

Apple iOS devices pair automatically with the media station when you connect using USB.

Android devices do not pair automatically with the media station when you connect using USB.

Important:

You can connect only one device at a time using Bluetooth.

Procedure

1. For an iOS device, perform the following actions:
   a. Enable Bluetooth on your smart device.
   b. Connect your device to the media station using either the dock on top of the media station or a USB cable.

      The media station beeps, plays the message “Pairing mode: connecting your device,” and the media station app opens. You hear a beep and the Bluetooth icon on the smart device shows an active connection.
2. On an Android device, perform the following actions:
   a. Put the media station into pairing mode by pressing and holding the **Call/Volume** button on the media station until you hear a single click.

      After you release the button, the media station plays the message “Pairing mode: waiting for connection.”
   b. Enable Bluetooth on your smart device.

      The smart device starts searching for the media station.
   c. When the smart device detects and displays the media station, tap the media station displayed on the smart device to initiate the pairing.

      You hear a beep and the Bluetooth icon on the smart device shows an active connection.

Connecting the media station to a smart device as a USB accessory

Before you begin

Download and install the media station app as described in Downloading the media station app on page 26.

About this task

Connecting the media station to a smart device as a USB accessory is a one-time procedure. On Android devices, you must administer options on the smart device to remember the media station. After connecting the first time, future connections happen automatically until you permanently remove the connection.

If you do not also pair the smart device using Bluetooth, you might lose the connection when you unplug the smart device from the media station.

Important:

You can connect only one device at a time using USB.

Procedure

1. On an iOS device, connect your device to the media station using either the dock on top of the media station or a USB cable.

   The media station app opens.

2. On an Android device, perform the following actions:

   a. Connect your device to the media station using either the dock on top of the media station or a USB cable.

      The smart device displays a dialog box asking if you want to remember the media station as a USB accessory.

   b. Tap the check box to remember the media station and tap **OK**.

      The smart device displays a dialog box asking if you want to open the media station app when connected to the media station.

   c. Tap the check box to always open the media station app and tap **OK**.

      The media station app opens.

Registering the media station app and signing in the first time

To make the app work with the media station, you must enter your credentials in the app to register with the media station. After you sign in the first time, subsequent use of the app only requires that you pair the device using Bluetooth. If you manually sign out from the app, you must manually sign in the next time you register the app with the media station.

Procedure

1. Open the media station app.
2. Tap **Settings** > **Account Setup** > **Add SIP Account**.

3. Enter the following user credentials as provided to you by your system administrator:
   - **Username**
   - **Password**
   - **Domain**, if requested
4. After entering the user credentials, tap **Sign In**.

   The smart device displays another **Sign In** option.
5. Tap **Sign In** again.

   The smart device displays the Settings screen.
6. Tap the smart device **Home** button.

   If sign in is successful, the app displays a green check mark. On some devices, the app also displays your telephone number and the status message **Available**. For devices that only show a green check mark, you can tap the check mark to display the account telephone number.

   Important:

   Before you make calls using the media station, ensure that the media station app is registered with the telephony server. The green check mark indicates that the media station app is registered.

Media station registration

When you sign in with the media station app, the media station remains logged on until one of the following happens:

- You sign out of the media station app and the media station unregistration timer expires, if administered.

  Important:

  Even if you sign out of the media station app, the media station continues to ring on incoming mobile cellular calls. The media station is also the default Bluetooth audio device for the smart device if the Bluetooth connection is active.
- Another Avaya app on the same smart device registers using the same extension.
- You turn off the media station.

When the system administrator does not administer automatic unregistration, the media station remains logged on even under the following conditions:

- The smart device is no longer docked with the media station.
- You turn off the smart device.
- The smart device is not within Bluetooth range of the media station.

When the system administrator does administer automatic unregistration, you can temporarily sign out and disconnect the app from your media station. The smart device saves your options and you can sign back in at anytime.

Important:

When you sign out of the app, emergency calling requires use of the USB handset. When you sign out from the app, the media station supports the same emergency call (for example, 911) capability as other Avaya SIP deskphones. The media station displays the emergency menu on the USB handset.

Adding or changing the voice mail telephone number

Before you begin

Ask your system administrator whether you must administer this option.

About this task

The **Voice Mail** button on the media station only works when the media station is registered.

Procedure

1. From the media station app, tap **Settings** > **Account Setup**.
2. Tap the account name.
3. Turn on **Advanced Parameters**.
4. Tap **Voice Mail**.
5. Enter the telephone number of the voice mail system.
6. Tap **Save**.

Chapter 4: Navigation

Displays

Caller ID support

The media station app supports Caller ID in the following ways:

- Calls within the telephony server network display the name and the telephone number if administered within the server.
- Calls outside the telephony server network display the telephone number unless the caller has privacy enabled.
- Calls outside the telephony server network display the name and the telephone number only if the telephone number is a contact in the smart device.

Icons

Media station control button descriptions

Icon	Name	Description
	Mute	Mute and unmute the media station speakerphone or handset microphone. The icon lights when you mute the call.
	Call/Volume	Answer calls, end calls, adjust volume, and pair Bluetooth devices.
	Voice Mail	Dial the administered Avaya telephony system voice mail telephone number. The icon lights to indicate that you have new messages.

Chapter 5: Operation

Calls

Making a call

About this task

Important:

To move a call on the handset to the speakerphone, you must press the **Call/Volume** button *before* you return the handset to the handset cradle.

Procedure

1. Making a call — Variation One.
   a. In the media station app, enter a telephone number on the app dialpad.
   b. Tap **Call**.

      The media station makes the call over your SIP line in speakerphone mode. You can move the call to the handset by picking up the handset. You can move the call to the headset by pressing **Talk** on the headset.
2. Making a call — Variation Two.
   a. In the media station app, enter a telephone number on the app dialpad.
   b. Press and hold **Call**.

      A dialog box displays where you can select **Call** or **Call using Cellular** to make the call. The **Call** option makes the call over your SIP line. The **Call using Cellular** option makes the call over your wireless carrier's mobile service.
   c. Tap the call option that you want to use.

      The media station makes the call in speakerphone mode. You can move the call to the handset by picking up the handset. You can move the call to the headset by pressing **Talk** on the headset.
3. Making a call — Variation Three.
   a. In the media station app, tap the **Recent Calls** icon and scroll to a number from the list of recent calls.
   b. Press and hold the number that you want to call.

The system displays a dialog box where you can select **Call** or **Call using Cellular** to make the call. The **Call** option makes the call over your SIP line. The **Call using Cellular** option makes the call over your wireless carrier's mobile service.

c. Tap the call option that you want to use.

The media station makes the call in speakerphone mode. You can move the call to the handset by picking up the handset. You can move the call to the headset by pressing **Talk** on the headset.

4. Making a call — Variation Four.

a. In the media station app, tap the **Contacts** icon and select a person from the contacts list.

b. Press and hold the number that you want to call.

The system displays a dialog box where you can select **Call** or **Call using Cellular** to make the call. The **Call** option makes the call over your SIP line. The **Call using Cellular** option makes the call over your wireless carrier's mobile service.

c. Tap the call option that you want to use.

The media station makes the call in speakerphone mode. You can move the call to the handset by picking up the handset. You can move the call to the headset by pressing **Talk** on the headset.

5. Making a call — Variation Five.

a. Lift up the handset.

b. Dial the number that you want to call.

c. Press the **Call** button on the handset. If you do not press the **Call** button, the media station makes the call after 3 seconds.

The media station makes the call in handset mode.

6. Making a call — Variation Six.

a. Press **Talk** on the headset.

b. From the media station app, dial the number that you want to call.

c. Tap **Call**.

The media station makes the call in headset mode.

Answering a call

Procedure

To answer a call, perform one of the following actions:

- Press the answer button on your smartphone. You hear the call on the speakerphone.
- Tap **Answer** on the media station app. You hear the call on the speakerphone.

- Press the **Call/Volume** button on the media station. You hear the call on the speakerphone.
- Pick up the media station handset.
- Press the headset **Talk** button.

Important:

The media station does not identify whether the call came from the Avaya telephony system or the smart device cellular network. Normal carrier charges apply when receiving a call from your cellular network.

Ending a call

Procedure

Perform one of the following actions:

- Press the hang up button on the smart device.
- In handset mode, replace the handset on the handset cradle.
- In speakerphone mode, press the **Call/Volume** button.
- In headset mode, press the **Talk** button or dock the headset on the headset base.

Making a second call

Procedure

1. While on an active call, tap **add call**.
2. Perform one of the following actions:
   - Tap the dialpad icon to dial the number. After entering the number, tap **Call**.
   - Tap **Last calls** to select the number that you want to call.
   - Tap **Recent Calls** to select the number that you want to call.
   - Tap **Contacts** or **Favorites** to select the person whom you want to call.

   Note:

   If you want to call the voice mail system, you cannot use the **Voice Mail** control button on the media station. You must manually dial the telephone number of the voice mail system.

   Note:

   If you decide to not make the call, tap **Touch to return to call** or **Cancel** to return to the original call.

The app makes a call to the number you selected or dialed.

3. After connecting with the second caller, you can perform any of the following actions:
   - From the media station app, tap **swap** to switch between your two calls. While switching between calls, you can drop the active call by tapping **End**.
   - From the media station app, tap **merge** to create a conference call.
   - From the handset, press one of the function keys to either switch between calls or create a conference call.

Answering a second call

About this task

When answering an incoming call while already active on a call, you have three options:

- You can answer the new call and put the current call on hold.
- You can answer the new call and disconnect the current call.
- You can ignore the new call.

Procedure

1. When answering an incoming call while already active on a call, the following occurs:
   - If the media station app is open, you see three options:
     - **Hold call + Answer**
     - **Ignore**
     - **End Call + Answer**
   - If you are using the handset, you hear a single 2–second beep and the second line of the handset displays the second call.

   Important:

   The media station does not alert you to a second call. Alerts only occur on the media station app or on the handset.
2. Perform one of the following actions:
   - Press the **Call/Volume** button on the media station. You hear the new call on the speakerphone or handset. The current call is put on hold.
   - Tap **Hold Call + Answer** on the media station app. You hear the new call on the speakerphone or handset. The current call is put on hold.
   - Tap **Ignore** on the media station app. The call is declined and you remain on your active call.
   - Tap **End Call + Answer** on the media station app. You hear the new call on the speakerphone or handset. The current call is disconnected.
   - If using the handset:
     a. Press either of the function buttons on the handset.

The handset displays an **Answer** icon above the left function button.

b. Press the left function button on the handset.

You hear the call on the handset. The current call is put on hold.

- From a headset, tap the **Talk** button.

3. When you finish with the second call,
   - Tap **End** on the media station app to end the call.
   - From the handset, press the **Hang Up** button to end the call.
   - From a headset, tap the **Talk** button.

   If you put the original call on hold, you are reconnected to the call.

Transferring a call

Procedure

1. While on an active call, tap **transfer** on the media station app.
2. Perform one of the following actions:
   - Tap the dialpad icon to dial the number.
   - Tap **Last calls** to select the number that you want to call.
   - Tap **Recent Calls** to select the number that you want to call.
   - Tap **Contacts** or **Favorites** to select the person whom you want to call.

   Note:

   If you decide to not make the call, tap **Touch to return to call** or **Cancel** to return to the original call.

   The app makes a call to the number you selected or dialed.
3. When the called party answers, tap **transfer** a second time.

   The first call transfers to the called number and the app returns to the idle mode.

Creating a conference call

About this task

You can create a conference call between two SIP calls, but you cannot merge a SIP call with a mobile call.

Procedure

While on two separate calls, tap **merge**.

The calls merge into one call.

Splitting a conference call

Procedure

1. While on a conference call from the handset:
   a. Press the left function key.

      The handset displays the **Split** function

   b. Press the function key again.

      The conference call splits and you are connected to one of the parties. The other party is put on hold.

   c. You can swap between the two calls using the function buttons or tap **merge** on the app to recreate the conference call.
2. While on a conference call on an iOS device:
   a. Tap the blue arrow to the right of **Conference** in the menu.

      The app displays the two active calls.

   b. Tap **Private** on the active call that you want to break out of the conference.

      The app puts the other call on hold.

   c. You can tap **End** to disconnect from the call, **merge** to recreate the conference call, or **swap** to connect to the other party.
3. While on a conference call on an Android device:
   a. Tap the active call that you want to break out of the conference.

      The app displays **Private** and **End**.

   b. Tap **Private** to connect to the call with whom you want to converse privately.

      The app puts the other call on hold.

   c. You can tap **End** to disconnect from the call, **merge** to recreate the conference call, or **swap** to connect to the other party.

Switching between two calls

Procedure

To move between two calls, tap **swap**.

The app puts the other call on hold.

Comments? infodev@avaya.com

Calling the voice mail system

About this task

The **Voice Mail** button on the media station only works when the media station is registered.

Procedure

Perform one of the following actions:

- Tap the **Voice Mail** control button on top of the media station.
- Press and hold any keypad number or symbol on the handset.
- Manually dial the voice mail system telephone number from the handset or media station dialpad.

The media station calls the voice mail system.

Contacts

Displaying and calling a contact

Procedure

1. In the media station app, tap the **Contacts** icon.
2. Browse through the contacts to find the person that you want to call.
3. Tap the name of the person that you want to call.

   The app displays the profile of the contact.
4. Make the call by tapping the number that you want to call. One contact might have several numbers.

Accessing contacts during a call

Procedure

1. While on an active call, tap **Menu** to display the call control screen.
2. Tap **Contacts**.

   The app displays your contacts.
3. To return to the Call Control screen, perform one of the following actions:
   - On an iOS device, tap **Touch to return to call**.

- On an Android device, tap the Avaya media station logo.

The app displays the Call Control screen.

Adding a contact to Favorites

About this task

This feature works only with iPad devices.

Procedure

1. Open the media station app.
2. Tap **Contacts**.
3. Drag a contact to the left.

   A blue star displays to the left of the **Favorites** icon.
4. Drag the contact up to the blue star.
5. If the contact has more than one telephone number, pick a number from the display.

   The contact is added to your favorites.

Call history

Displaying recent calls

About this task

All smart devices display a list of recent calls. On iOS devices, you can also move between all recent calls and missed calls. On Android devices, the list of recent calls include both SIP calls and cellular network calls.

Some smart devices also display a list of the three most recent calls. See the following description about which devices display the three most recent calls:

- Android devices: All Android devices display the three most recent calls in the **Home** menu of the media station app.
- iPhones: The **Home** menu of the media station app can display the three most recent calls on iPhones. You must enable the Recent Calls option in **Settings** > **Application** > **Recent calls**.
- iPads: You cannot administer an iPad to show the three most recent calls.

Procedure

1. Open the media station app.

2. Perform one of the following actions:
   - Tap **Home** to display the three most recent calls.
   - Tap **Recent calls** to display the full list of recent calls.
3. On an iOS device, tap **All** or **Missed** to move between all recent calls and missed calls.

Making a call from the Recent Calls list

Procedure

1. Open the media station app and view the recent calls list.
2. Perform one of the following actions:
   - On an iOS device, tap the recent call entry that you want to call.
   - On an Android device, from the most recent calls list, tap the recent call entry that you want to call.
   - On an Android device, from the list of recent calls, perform one of the following actions:
     - Tap the handset icon on the call entry that you want to call.
     - Press and hold the call entry that you want to call. Choose **Call** to make the call over your SIP network or choose **Call using Cellular** to make the call over the cellular network of the smartphone .

   The app establishes a call with the contact.

Deleting call history

About this task

Deleting entries in your recent calls works differently between iOS and Android devices:

- You can delete recent calls one at a time on iOS devices.
- You can delete all recent calls on some Android devices.

Procedure

1. Display the list of recent calls.
2. Perform one of the following actions:
   - On an iOS device, sweep the recent call to the left and tap **Delete** to delete the entry.
   - On an Android device, tap the **Delete** icon that displays to the left of the **Settings** icon. This operation deletes all recent call entries.

Miscellaneous features

Changing the media station ring tone and other sounds

Procedure

1. From the media station app, select **Settings** > **Sounds**.
2. Set any of the following sound controls on the media station:
   - Ringtone
   - Ring volume
   - Alerts volume
   - Music volume
   - Hearing aid mode

Adjusting the volume while on a call

Procedure

When the media station is ringing or when you are on a call, turn the **Call/Volume** button to regulate the volume.

Note:

You cannot control the volume of a call using the volume control of your smart device.

Muting and unmuting the microphone

Procedure

1. To mute the microphone on an active call, perform one of the following actions:
   - Press **Mute** on the media station.
   - Tap **mute** on the Call Controlscreen.

   A blue LED lights up the **Mute** button.
2. To unmute the microphone on an active call, perform one of the following actions:
   - Press **Mute** on the media station.
   - Tap **mute** on the Call Control screen.

   The blue LED turns off when the microphone is active.

Changing the focus of the media station microphone

Using the app on your smart device, you can control the focus of the microphones on the media station. You can focus the microphone on the person in front of the media station, as in an office, or to a group of people gathered around the media station.

Procedure

1. While on an active call, tap **Menu** to bring up the call menu.
2. Tap the microphone focus icon to switch between the following two options:
   - Select **Front** to focus the microphone on the person in front of the media device. You can usually use this setting in an office.
   - Select **Room** to focus the microphone on all sides of the media device. Use this setting when you have a group of people gathered around the media station.

Listening to music from the smart device

Procedure

1. Tap the **Home** button on the smart device.
2. Select a music source from your device.

   A source can be a music player on the device or a streaming app. When you make a call or a call comes into the media station, the app mutes or pauses the music.

Control of the audio stream

Important:

Audio streams for SIP calls only route through the media station, not the smartphone. Audio streams for mobile calls can route through the media station or the smartphone. Review the following sections to understand how this works.

SIP calls

You can only hear the audio for calls made to or answered from the telephony server on the media station handset or speakerphone. If you make or answer a SIP call on a smartphone using the media station app, you cannot hear the audio on the smartphone. You can only hear the audio on the media station.

Scenario: You register your smartphone with the media station. You go to a conference room that is within Bluetooth range of the media station. You receive a call originating on the SIP telephony server. The media station app alerts you to the call on your smartphone. If you try to answer the call from the smartphone, you cannot converse with the caller because the media station connected to the telephony server controls the audio stream. You must return to your office to continue the call.

This scenario is also true when making a call using the media station app on a smartphone.

Cellular calls

You hear the audio for calls made to or answered from a cellular network on a smartphone or on the media station handset or speakerphone. If you make or answer a mobile call on a smartphone, you can choose to hear the audio stream on the smartphone or the media station handset or speakerphone.

Scenario: You register your smartphone with the media station. You go to a conference room that is outside the Bluetooth range of the media station. You receive a call originating from the cellular network. If you answer the call from the smartphone, you can converse with other person because the cellular network controls the audio stream. You can also return to your office *before* you answer the call and receive the call on your media station handset or speakerphone.

Important:

When you make or answer a call on a cellular network, you cannot manually transfer the audio to the media station handset or speakerphone. However, if you are on a cellular call and you become within Bluetooth range of the media station, the audio automatically transfers from your smartphone to the media station.

Transferring the audio output between the media station and a smart device

While listening to music, on a call, or watching a video, you can transfer audio from the media station to your smart device or from your smart device to the media station.

Important:

You cannot transfer the audio output of SIP calls.

About this task

You can transfer audio signals between an app running on a smart device to the media station when connected with a USB cable or when paired using a Bluetooth connection.

Note:

You cannot transfer audio control to the smart device while connected using the USB cable or when docked on the media station.

Procedure

1. To transfer audio from the media station speakers to your smart device, perform one of the following actions:
   - On an iOS device connected only by a USB cable, disconnect the cable.
   - On an iOS device connected only by Bluetooth, swipe up from the bottom of the screen to display Control Center. Tap the media station link for AirPlay and select the smart device. The AirPlay control sometimes displays on streaming audio or video apps, so you might need to control the transfer from the app.

- On an Android device connected only by Bluetooth, open **Settings** > **Bluetooth**, and tap the **Settings** for the media station. Cancel the **Media audio** option selection and tap **OK**.
- On an Android device connected by Bluetooth and a USB cable, open **Settings** > **Bluetooth** and turn off Bluetooth.

The audio transfers from the media station to the smart device.

Note:

Some audio and video apps pause the stream when you change the audio control output. If this happens, tap **Play** in the audio or video app.

2. To transfer audio from your smart device to the media station, perform one of the following actions:
   - On an iOS device connected only by a USB cable, reconnect the cable.
   - On an iOS device connected only by Bluetooth, swipe up from the bottom of the screen to display Control Center. Tap the media station link for AirPlay and select the media station. The AirPlay control sometimes displays on streaming audio or video apps, so you might need to control the transfer from the app.
   - On an Android device connected only by Bluetooth, open **Settings** > **Bluetooth**, tap the **Settings** for the media station, select the **Media audio** option, and tap **OK**.
   - On an Android device connected by Bluetooth and a USB cable, open **Settings** > **Bluetooth** and turn on Bluetooth.

   The audio transfers from your smart device to the media station.

   Note:

   Some audio and video apps pause the stream when you change the audio control output. If this happens, tap **Play** in the audio or video app.

Signing into the app

Procedure

1. Open the media station app.
2. Tap the account telephone number.

   The app displays the active account.
3. Tap the active account.

   The app displays the basic parameters of the account.
4. Tap **Sign In**.

   The app displays **Available** and the gray dot changes to a green check mark.

Signing out from the app

Procedure

1. Tap the account telephone number.

   The app displays the active account.

2. Tap the active account.

   The app displays the basic parameters of the account.

3. Tap **Sign Out**.

   The app displays **Offline (Disconnected)** and the green check mark changes to a gray dot.

Chapter 6: Maintenance

Updating the media station app

Avaya releases regular updates to the media station app. Update the media station app when prompted by your smart device.

About this task

Depending on your smart device, some apps update automatically. Some smart devices require you to manually install the update. If your smart device automatically updates your apps, you do not need to perform any action. If you must manually update your apps, follow this procedure.

Procedure

1. From your smart device, navigate to the Apple App store or the Google Play store.
2. Search for **avaya**.
3. Select the **Avaya Media Station** app.
4. Tap **UPDATE**.

   The icon changes to **INSTALL**.
5. Tap **INSTALL**.

   The media station app downloads and installs on your smart device.

Removing and replacing a cable sleeve

Use this procedure to remove and replace a cable sleeve when you change the smartphone you are using.

Before you begin

Disconnect your smartphone from the media station, turn off the media station, and disconnect all cables from the media station.

Procedure

1. Turn the media station upsidedown.
2. Bend the cable sleeve latch to release the cable sleeve from the media station base.

3. Push the cable sleeve out of the media station base.
4. Replace the cable sleeve and USB cable as shown in Connecting a smartphone on page 16.

Chapter 7: Troubleshooting

Frequently Asked Questions

In which direction must I put the cable sleeve in the slot?

To correctly attach your smartphone, you must insert the cable sleeve in the slot in the proper direction. Insert the cable sleeve with the cable cord hole facing the **Call/Volume** button. See the following diagram.

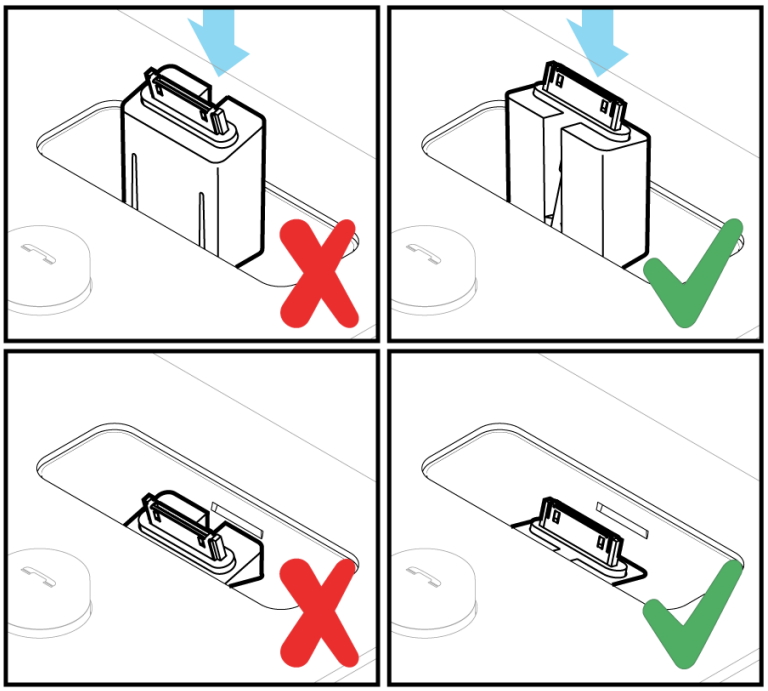

How do I reverse a cable sleeve if I inserted the sleeve the wrong way?

From the bottom of the media station, bend the cable sleeve latch and push the cable sleeve out of the media station. You might need to use a tool such as needle-nose pliers to push the cable sleeve out of the media station. Guide the cable sleeve out of the media station from the top of the media station. When the cable sleeve is out of the media station, turn the sleeve around 180° and reinsert the cable sleeve the proper way.

What smart devices are compatible with the media station?

See Product compatibility on page 10.

Does the media station operate over a wireless Internet connection?

No, the media station does not support wireless Internet connections.

How can I find my SIP user name and password?

Contact your Avaya telephony server administrator.

How do I make a Bluetooth connection?

See Connecting smart devices with Bluetooth pairing on page 27.

Must I use the media station handset?

No. If you do not install the handset, you must dial all calls using the media station app.

I lost my handset cradle. How can I get a new one?

Contact your system administrator. Your system administrator can order a replacement accessory kit that includes a handset cradle. You can also order replacement power adapters, handsets, and tablet brackets.

What type of headsets can I use with the media station?

See Product compatibility on page 10.

Can I receive a SIP call on my smartphone as if it came from the cellular network?

No, this operation is not possible.

Can I transfer a call on the media station to my mobile smartphone to continue the call?

No, this operation is not possible.

Can I manually transfer a cellular call on my mobile smartphone to the media station to continue the call?

No, this operation is not possible. However, if you are on a cellular call and you become within Bluetooth range of the media station, the audio automatically transfers from your call to the media station.

Why is there a computer Ethernet port?

The computer Ethernet port provides a convenient way to provide a switched Ethernet connection for your computer.

Can I listen to music that is on my smart device over the media station speakerphone?

Yes. See Listening to music from your device on page 43.

Can I connect the media station to the PC port on my 96x1 IP deskphone?

No, the PC port on a 96x1 IP deskphone does not provide a dedicated Ethernet connection. The media station requires a provisioned network connection using a physical Ethernet jack.

Can I pick up an active call on another Multiple Device Access (MDA) device from the media station?

No, this operation is not possible.

What options must I set on my USB headset?

Administer the USB softphone options to **Other**, not **Avaya**. You can also change other default options such as the mute tone and the incoming call ringing tone. Connect the USB headset to your PC and set these options before you connect the headset to the media station.

Will the media station app interfere with other Avaya telephone apps?

Remember the following product interactions when using the media station app with Avaya apps such as Avaya one-X® Mobile and Avaya Communicator:

- Avaya one-X® Mobile and Avaya Communicator do not have native support for managing the media station. The apps can use the media station as a Bluetooth speakerphone.
- In the speakerphone mode, the media station operates as any other Bluetooth speakerphone.
- The calls are not handled over the SIP line, but the wireless carrier of the smartphone.
- Audio quality might be poorer because the call is not routed over the SIP line.

Removing the Bluetooth connection

About this task

You can remove a Bluetooth connection in any of the following ways:

- Using the media station app (iOS only)
- Using the media station **Call/Volume** button
- Using the smart device **Settings** menu

If you are having problems getting a smart device to connect with the media station, remove the connection before trying to connect again.

Depending on how you remove the Bluetooth connection, you might have to use your smart device Bluetooth menu to disconnect the media station.

Procedure

1. Using the media station app (iOS only), perform the following actions:
   a. Select **Settings** > **Bluetooth**.
   b. Confirm that the status shows **paired**.
   c. Tap **Disconnect**.

      The system removes the Bluetooth connection.

      Note:

      If you remove the connection using the media station app menu, you must disconnect and reconnect the cable because the pairing does not happen automatically. You must go to **Settings** > **Bluetooth** and tap **Start Pairing**.
2. Using the media station **Call/Volume** button, perform the following actions:
   a. Press and hold the **Call/Volume** button until you hear two clicks.

The media station plays the message “Disconnecting,” followed by a high-to-low tone sound.

b. To clear all Bluetooth connections to the media station, press and hold the **Call/Volume** button until you hear three clicks.

The media station plays the message “Clearing all subscriptions.”

3. Using the smart device, perform the following actions:
   a. Select **Settings** > **Bluetooth**.
   b. Tap the **Info** icon.
   c. Tap **Forget this Device**.

   The system removes the Bluetooth connection.

The media station app displays the Not Connected (Network) message

Error code `Not Connected (Network)`

Problem description

The media station is disconnected from the network.

Related Links

Resolving a Not Connected (Network) message on page 52

Resolving a Not Connected (Network) message

Procedure

1. Restart your smart device.
2. Turn the media station power off and on.
3. If the condition persists, open the media station app.
4. Open **Settings** > **Avaya Media Station** > **Network**.
5. Confirm that the media station has an IP address. If the app does not display an IP address, you might have to reset the media station to factory defaults. Contact your system administrator for support.

Related Links

The media station app displays the Not Connected (Network) message on page 52

Index

A

accessing
    contacts during a call 39
adding
    contact to Favorites 40
adjusting 42
adjusting volume while on a call 42
Android Beta program 10
answering
    second call 36
answering calls 34
audio output 44
audio stream control 43

B

Bluetooth pairing 27
button descriptions 15

C

call
    answering 34
    answering second call 36
    ending 35
    making a second call 35
    transferring 37
caller ID 32
call history
    deleting 41
calling a contact 39
calling the voice mail system 39
calls
    making 33
    switching between 38
    voice mail 39
changing
    microphone focus 43
compatibility 10
conference calls 37
connecting
    tablet 20
connecting power to the media station 24
connecting smart devices 27, 28
connecting the handset 22
connecting the media station 16
connecting your network to the media station 23
contacts
    accessing during a call 39
    displaying and calling a contact 39
control button descriptions 32
creating a conference call 37

D

deleting
    call history 41
displaying
    recent calls 40
displaying a contact 39
documentation 11
downloading apps 26

E

ending a call 35

F

FAQs 49
features 7
forwarding a call 37

H

handset, connecting 22
hardware supply 12
headset compatibility 10

I

interoperability 10

J

joining two calls 37

L

listening to music 43

M

Made for Apple program 10
making a call 33
making a second call 35
media station, connecting 16
media station, connecting power 24
media station, connecting to your network 23
media station, preparing 14
media station buttons 15
media station overview 7
merging calls 37
microphone

microphone *(continued)*
changing the focus 43
microphone, muting and unmuting 42
music, listening 43
muting the microphone 42

N

Not Connected (Network) 52
Not Connected (Network) message 52

O

operating temperature 12

P

positioning media station 16
power up 26
preparing the media station 14

R

rear panel connectors 15
rear panel controls 15
recent calls
displaying 40
redialing a number 41
redialing a number from the recent calls list 41
registering a device 29
registration 30
remove cable sleeve 47
removing Bluetooth connection 51
replace cable sleeve 47
ring tones 42

S

safety guidelines 12
setting registration parameters 29
setting up SIP voice mail 31
signing in 30
signing out 30, 45, 46
SIP voice mail, setting up 31
sounds 42
splitting a conference call 38
storage guidelines 12
support
contact 12
swapping between calls 38
switching between calls 38

T

tablet, connecting 20
temperature, operating and storage 12
transferring a call 37
transferring audio output 44

U

unmuting the microphone 42
updating
media station app 47
USB accessory 28

V

videos 12
voice mail
setting up SIP voice mail 31
volume 42