INTUITY AUDIX LX ™

Message

Server

Configuration Note 9510 – RIP 02/10

Lucent #5ESS with 3A Translator

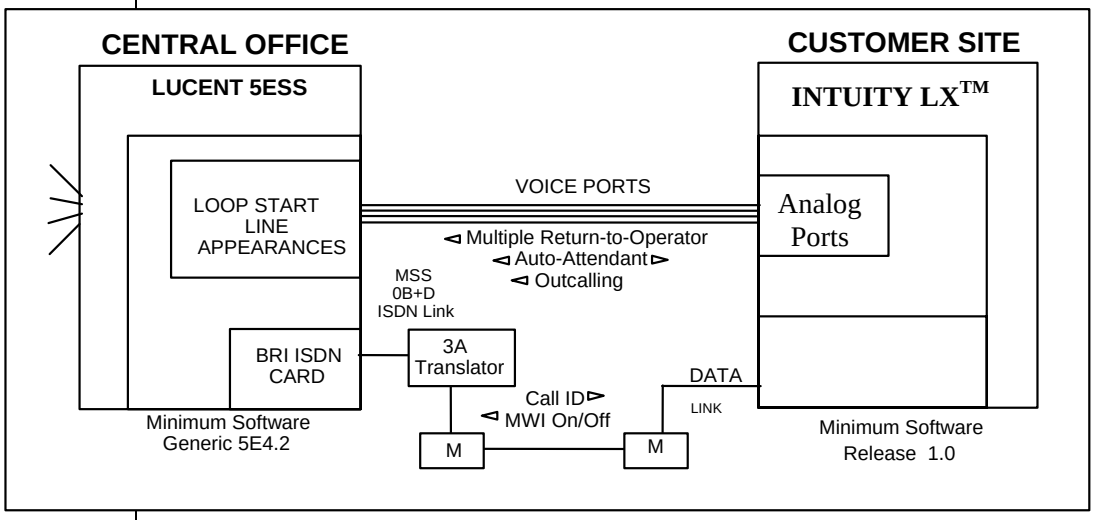

IMPORTANT:
This CN is for Support ONLY of Existing Integrations as originally installed.
No NEW Sales or Conversions to different Integrations are supported.

Describe how call information is sent from the 5ESS to the INTUITY AUDIX LX ™

1.0 METHOD OF INTEGRATION

With RS-232 integration, call information is transmitted over a digital link between the 5ESS and the INTUITY AUDIX LX ™. Voice communications are provided by a separate path created by a hunt group of single-line stations on the 5ESS connect to voice port cards within the INTUITY AUDIX LX ™. When an incoming call is received by the hunt group, it is accompanied by a digital message from the 5ESS which contains call information. The INTUITY AUDIX LX ™ then answers the call on the specified port and plays the appropriate greeting. To set or cancel message-waiting notification, the INTUITY AUDIX LX ™ sends a digital message over the RS-232 link to the 5ESS.

Avaya INTUITY AUDIX LX ™ Requirements

2.0 AVAYA INTUITY AUDIX LX ORDERING INFORMATION

- Voice Cards, four analog connections per card (three cards per system)
- INTUITY AUDIX LX Software R1.x, 2.0
- Serial and Inband Integration Software
- Serial Connection For RS232

Disclaimer: Configuration Notes are designed to be a general guide that reflects AVAYA Inc.'s experience configuring its systems. These notes cannot anticipate every configuration possibility given the inherent variations in all hardware and software products. Please understand that you could experience a problem not detailed in a Configuration Note. If so, please notify the TAC/TSO at (408) 922-1822, and if appropriate, we will include the problem in our next revision. AVAYA Inc. accepts no responsibility for errors or omissions contained herein.

3.0 CENTREX HARDWARE REQUIREMENTS

Centrex hardware requirements

- Loop start line appearances, one per INTUITY AUDIX LX ™ port
- Remote service access
- Cables
- Basic Rate Interface (BRI) channel for data link
- AT&T #5ESS 3A Translator

NOTE: To assist in ordering a 3A translator, the AT&T commodity, or com, codes for the translator is as follows:

- V1 3A Translator: 601325350 - Manufacturer Discontinued
- V2 3A Translator: 601329089 - Manufacturer Discontinued
- V3 3A Translator. 601791932 - Manufacturer Discontinued
- V4 3A Translator. P/N 708-60A

3.1 CENTREX SOFTWARE REQUIREMENTS

Centrex software requirements

- Minimum software level - Generic 5E4.2
- Message Service System (MSS) software

4.0 SUPPORTED INTEGRATION FEATURES

Supported integration features

- Station forward to personal greeting
  - all calls
- System forward to personal greeting
  - busy
  - no answer
- Multiple Greetings
  - internal
  - external
  - busy
  - no answer
- Message Waiting Indicator
  - stutter dial tone
  - lights (ISDN sets only)
- Automated Attendant
- Outcalling
- Multiple Return-to-operator
- Direct Call

- Personal greeting of original-called party on a multiple-call forward
- Reply to message left by subscriber in internal telephone-answering mode *(See section 8.1)*

5.0 CONFIGURING THE #5ESS TO SUPPORT MSS

Configuring the #5ESS to Support MSS

The Voicemail system connects to the PBX using a data connection between the I/O port of the PBX Switch to the I/O port of the INTUITY LX voice mail system. This is an industry standard SMDI protocol that uses an RS-232 connection.

The characteristics of the physical link consists of setting the baud rate, data bits, parity, and stop bits. These settings must match on both the PBX and the INTUITY LX.

The voice path is configured as if it were a series of single line telephones. These single line telephones are referred to as analog ports. Each port requires an RJ11 connection into the INTUITY LX. These analog ports must be configured in a hunt group. The hunt group is created in the PBX to allow the station to hunt to the next voice port. Call Information packet is passed from the PBX to the INTUITY LX over the data-connection via the SMDI protocol. The call information packet will contain a message desk number (MDN), a logical terminal number (LTN) and the called party ID (where the call was forwarded from) at the minimum.

For a better integration, the switch should pass the calling party ID & the reason code for why the call was forwarded.

In case MWI is to be supported, the switch protocol should support passing of MWI ON/OFF code and the switch is responsible for switching the MWI lamp ON/OFF on the user's telephone when the switch receives such a code from the INTUITY AUDIX LX.

In addition, all users telephones must be programmed to forward to the Pilot Number of the voicemail system on a ring-no-answer and busy condition.

☐ The following steps are required on the switch:

After the telephone company has installed the BRI channel for the MSS data link, arrange to install the wiring in the building to carry the line from the main distribution frame to the INTUITY AUDIX LX ™ location. Terminate these wires onto an 8-wire modular jack. Use the pin-out information in *Table 1* to correctly terminate the wires at the jack (transmit and receive referenced from the #5ESS):

TABLE 1

Pin 1	-	Pin 5	transmit
Pin 2	-	Pin 6	receive
Pin 3	receive	Pin 7	-
Pin 4	transmit	Pin 8	-

- ☐ Get the name and telephone number of the technician who will assist with the installation at the Central Office.
- ☐ The following #5ESS translations are used to create the MSS database within the switch. The Central Office technician should be familiar with this programming. (Specific AT&T programming instructions for MSS are contained in Translation Guide 5, Section 3.)
- ☐ Create the (SMDI) MSS data link using *Recent Change 24.7*. See the example menu in *Figure 1*.

FIGURE 1

DSL AP COMMUNICATIONS DATA

*1. AP SITE ID	1	4. RMK OCTEL AP IDX
#2. SM	20	
#3. ALARM	N	

6. LINK DATA

LINK NBR	LCEN	ISCN	TS	QTR	TS	REL	PIDB	EXT NAME
1.	02000010	110100	1	2			3	AP04-01
2.								
3.								
4.								
5.								
6.								
7.								
8.								
9.								
10.								
11.								
12.								
13.								
14.								
15.								
16								

.

- ☐ Create the MSS Group associated with the MSS (SMDI) link using *Recent Change 4.37*. See the example menu in *Figure 2*.

FIGURE 2

The information contained in this document is provided by AVAYA Inc. to serve as a guide. See the disclaimer on page 1.

MESSAGE SERVICE SYSTEM GROUP PARAMETERS

		Intuity
*1.	MSS GRP	
#2.	BCID	1
#3.	DELUXE	Y
#4.	MSG SRV CNTR MLHG	4
#5.	PASSWORD	N

- ☐ The MSG SRV CNTR MLHG entry is the identification number of the INTUITY AUDIX LX ™ multi-line hunt group.
- ☐ Ask your switch technician to provide you with the BCID (Business Customer Identification for your Centrex group) and the LCEN (line card equipment number). The LCEN is the identifier of the physical location of the BRI port within the switch. You will use these when configuring the 3A Translator.
- ☐ Create the multi-line hunt group for the INTUITY AUDIX LX ™ ports using *Recent Change 3.5*. See *Figures 3 and 4*.

FIGURE 3

SCREEN 1 OF 2

MULTILINE HUNT GROUP (LINE ASSIGNMENT)

			SUBGROUP TNs		
*1.	HML	4	13.	SUBTN1	_____
#2.	MLH FEATURE	/MHU	14.	SUBTN2	_____
3.	LISTED TN	5551212	16.	SUBTN4	_____
4.	LAST LISTED TN	_____	16.	SUBTN4	_____
5.	GROUP TRC	N	17.	SUBTN5	_____
#6.	RAX	1	18.	SUBTN6	_____
7.	GRPBSYSPBN	_____			
8.	OVF MSG REG	_____	ADDITIONAL ISAT SUBGROUP TNS		
9.	MODULE	0	19.	SUBTN7	
10.	RMS SA ANNC	N	20.	SUBTN8	_____
11.	RMK	OCTEL			
12.	FPREEMPT	0			

The “LISTED TN” (the pilot number of the multi-line hunt group) is the INTUITY AUDIX LX ™ system access number. It is used to forward subscribers’ phones so that their calls are answered by the INTUITY AUDIX LX ™. They also call this number directly to access their mailboxes.

The total number of terminals (ports) in the hunt group are placed in the "GRP SIZ" and "ACT SIZ" entries.

- ☐ Create each individual terminal associated with the multi-line hunt group using *Recent Change 3.2*.

FIGURE 4.

```
SCREEN 2 OF 2

                    MULTILINE HUNT GROUP (LINE ASSIGNMENT)


GRP SIZ (V ONLY)          24      30. AP SITE ID   1        ISDN ATTENDANT
ACT SIZ (V ONLY)          24      31. BCID1        1        40. IS  ISAT      N
                                  32. BCID2        _____    41. CONFIG1       _____
24. QUEUEING ALLOWED      N       33. BCID3        _____    42. CONFIG2       _____
25. Q FEATURE             _____   34. BCID4        _____    43. CONFIG3       _____
MODEM POOLING
26. MPTYPE                _____
27. PFX                   _____   MONITORING OPTION
28. MAINT                 N       38. MONITOR      N
29. IDP                   N       39. ISAT MLHG
```

- ☐ Assign a special MSS feature to each extension using *Recent Change 1.11*. One of a number of possible pre-constructed MSS features can be chosen. Avaya recommends the use of the following features:
  - Analog set extensions - /MSAIPAD
  - ISDN set extensions - /MSALL
- ☐ Assign the MSS functionality to individual subscribers' extension using *Recent Change 1.37*. See the example menu in *Figure 5*.

FIGURE 5.

```
*1.  TN          5551222
*2.  FEATURE     /MSAIPAD
#3.  MSS GRP     OCTEL
```

- ☐ If applicable, assign a visual message-waiting button for all ISDN set extensions using *Recent Change 12.5*.

The information contained in this document is provided by AVAYA Inc. to serve as a guide. See the disclaimer on page 1.

6.0 CONFIGURING THE INTUITY AUDIX LX ™

☐ For more information on configuring the INTUITY AUDIX LX, click Help on the appropriate page, or refer to the INTUITY AUDIX LX CD ROM and refer to the Switch Integration chapters for detailed information.

☐ The following are the steps required for an INTUITY AUDIX LX ™. R2.x. INTUITY AUDIX LX 2.x uses a simpler GUI as shown in our example screen below. All you need do is open the category you will administer (shown in yellow text next to the small white triangles in the left column). You can expand these by click on the white triangle to left of it. Once this is done the category will expand providing choices below it. In our example we have opened Switch Administration. The triangle points down to indicate it is open.

Here we selected Interface Parameters. This is noted by the white rectangle around the text Interface Parameters in blue.

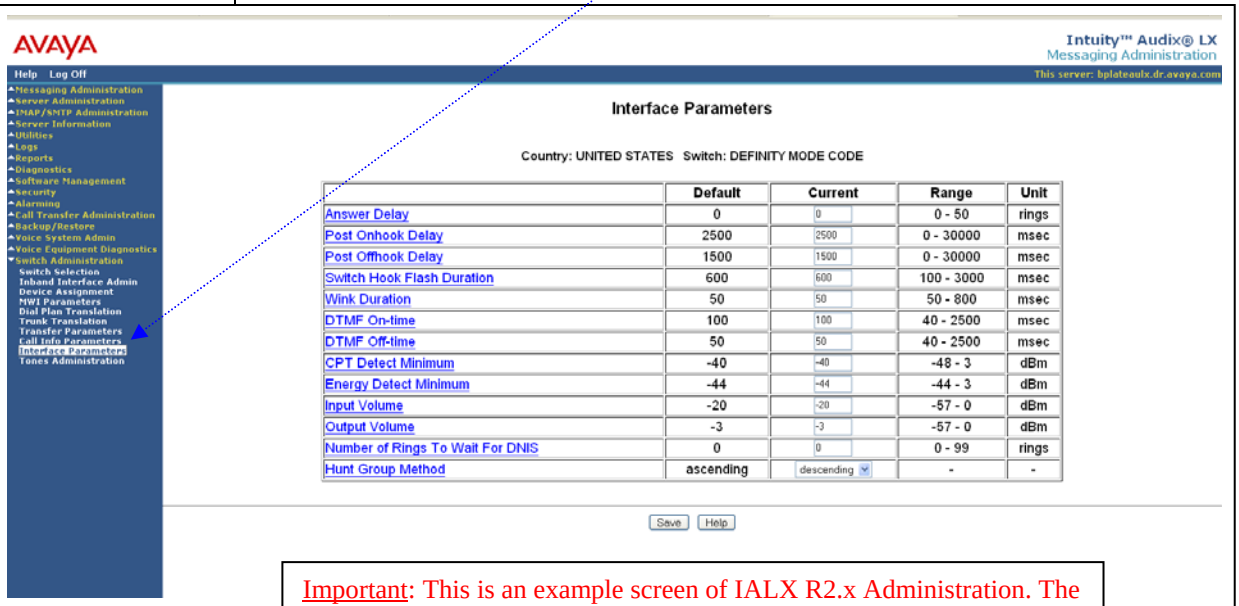

	Default	Current	Range	Unit
Answer Delay	0	0	0 - 50	rings
Post Onhook Delay	2500	2500	0 - 30000	msec
Post Offhook Delay	1500	1500	0 - 30000	msec
Switch Hook Flash Duration	600	600	100 - 3000	msec
Wink Duration	50	50	50 - 800	msec
DTMF On-time	100	100	40 - 2500	msec
DTMF Off-time	50	50	40 - 2500	msec
CPT Detect Minimum	-40	-40	-48 - 3	dBm
Energy Detect Minimum	-44	-44	-44 - 3	dBm
Input Volume	-20	-20	-57 - 0	dBm
Output Volume	-3	-3	-57 - 0	dBm
Number of Rings To Wait For DNIS	0	0	0 - 99	rings
Hunt Group Method	ascending	descending	-	-

Important: This is an example screen of IALX R2.x Administration. The values shown here are not necessarily the ones you need to enter. Please read the CN for more detailed information.

HINT: When changes to the Switch Interface Administration are completed, the voice system must then be stopped and started.

- Start at the Administration main menu
- Select Basic System Administration.
- Select **Switch Selection**.

Once a selection is made the appropriate screen will open allowing you to enter the parameters as noted in the CN.

NOTE: The Definity Mode Code software may have to be loaded from the software CD that came with the Intuity LX.

- Under **Switch Administration**:
  - Click on ***Switch Selection***
  - *Select UNITED STATES – 5ESS or SMDI*
  - Click **Save**
- Under **Voice System Admin**
  - Click on ***Assign Chans to Groups***
  - If you are setting up different channels to different groups, complete these fields as follows:
    - Channels: *Enter a number or range* (for example, **0,1,2** or **0 1 2** or **2-4** or **all**).
    - Groups: *Enter a number or range* (for example, **0,1,2** or **0 1 2** or **2-4** or **all**).

  NOTE: By default all channels are assigned to group 2.

  - Click **Save**
  - Click on ***Assign PBX Ext/Chans***
    - Starting PBX Extension: *Enter a phone number* (**the pilot number**) for the first channel (up to 7 digits).
    - Starting Channel Number: *Enter a number* (start at channel 0).
    - Ending Channel Number: *Enter the last channel number*.

    (Example: If 12 port system the last port is 11)

  - Click **Save**
  - Click on ***Assign Services/Chans***
    - Channel: Enter the channel number and/or a range of numbers.
    - Service: (You have the option to select *DNIS_SVC, AUDIX, Chan Tran, chandip, or init_xfer). Choose ***DNIS_SVC**.
  - Click **Save**
- Under **Voice Equipment Diagnostics**

  Click on ***Display*** and verify that the information you entered was entered correctly and that the voice card is INSERV state.
- Under **Voice System Admin**
  - Click on ***Assign Number Services***
    - Called Numbers: ***any*** (the field after the "to" is blank).
    - Calling Numbers: ***any*** (the field after the "to" is blank).
    - Service Name: ***AUDIX***.
  - Click **Save**

Note:

Leave these settings blank if you are using ONE Hunt Group / Pilot Number (aka Message Desk).

Entries only need to be made if you are using more than one Hunt Group / Pilot Number (aka Message Desk).

The information contained in this document is provided by AVAYA Inc. to serve as a guide. See the disclaimer on page 1.

- Click on ***Display Number Services*** and verify that the information was correctly entered.

- Under **Call Transfer Administration**. Customers have the option to select numbers to be allowed or denied when they are performing transfers. You can add, delete and display numbers here. Restrictions (denied numbers) can also be administered if any are to be used.
  - If you click on ***Allowed Number Display***, you will see the following for a four-digit dial plan:

From	To
0	9999

Click **Return to Main**.

Note: If 7 digit plan it would be 0 to 9999999

- Under **Switch Administration**
  - Click **Switch Link Admin**
    - Assign parameter values that match the Cisco CM VG-248 serial port (*below are examples of parameters used.*):

      Data bits: 7
      Stop bits: 1
      Start bits: 1
      Baud rate: 1200
      Parity: E
      Flow control: N

      Under **Serial Ports**, **Port 1** (pull-down menu): select /dev/ttyS0

  - Click on **Device Assignment**
    - Link Test: **N** (If link test is set to '**Y**' enter the values for the following fields:
      - Link Test Interval: 100 (specifies the heartbeat interval in seconds)
      - Heartbeat Timeout: 30
      - Switch Number: 1 (range can be 1-64)
      - Device ID: **/dev/ttyS0** (*see note below*)
      - Link Test Number: 9999999

NOTE: Before configuring the Device ID field, the Link parameters for the serial interface need to be configured. This should have been done in the previous step.

The serial port **/dev/ttyS0** and **/dev/ttyS1** are reserved for INTUITY AUDIX LX™ system use. Select **/dev/ttyS0**.

Click on **MWI Parameters**

Note: The MWI Prefix/Suffix are grayed out and cannot be administered. They are displayed for verification only.

- MWI On Prefix: OP:MWI,0x20
- MWI On Suffix: !,0x04
- MWI Off Prefix: RMV:MWI,0x20
- MWI Off Suffix: !,0x04
- MWI Update: **Y**
- Intuity Prefix: **N**
- Log MWI Update: **Y**
- Switch Prefix: **Y** (This appends a prefix to the extension number for MWI)
- Background Refresh: **N** *(If set to '**Y**' set the following values)*
  - Background Interval: **60**
  - Background Updates: **1**
  - Broadcast Interval: **10**
  - Broadcast Updates: **3**
- Click **Save**

- Click **Dial Plan Translation**
  - Add or Update INTUITY Extension Length
  - Max PBX Extension Length: 10
  - Define the Switch Network Access Code: *<If required>*
  - Add or update the "Switch Prefix" as 000.
  - Enter the valid extension ranges in Switch Start Ext. as **0000** and in Switch End Ext. as **9999**.
  - Leave the INTUITY Prefix field blank.
  - Enter Switch number. This is the same number that is used in the AUDIX subscriber database.
  - Enter **N** in the Remote [Y/N] field.
- Click **Update**
- Click **Trunk Translation**
  - Enter the Trunk Number *<if required>*
  - Define the INTUITY Subscriber Number.
- Click **Update**

ADD
Subscriber Msg Admin
Enter command:
cha ma
(means *change machine*)

Then set:
start ext: 0000000
end ext: 9999999

In Switch Administration Intuity Subscriber Name should be left blank

- Click on **Attendant Translation**
  - Attendant ID: (Specifies Attendant extension # on the switch)
  - Intuity Subscriber Number: (the Mailbox that is substituted for the Attendant ID passed on by the switch)
- Click **Update**

- Click on **Hunt Group Translation**

Note: Administering Hunt Group Translations are typically used with multiple trunk groups and may not be required for implementations that use a single Hunt Group/Pilot #

- Message Desk Number: 2 (specifies the MDN being mapped to the specified INTUITY channel. Range is from 1 to 999.)
- Logical Terminal Number: 0-11 *(Note: 0-11 is for 12 ports)*

Click Return to Administration main menu

After all the required administration is completed, stop and restart the INTUITY AUDIX LX .

- continued on next page -

Installing and Configuring the AT&T #5ESS 3A Translator

7.0 INSTALLING AND CONFIGURING THE AT&T #5ESS 3A TRANSLATOR

☐ Refer to the CD ROM for details on the 3A and see the Centrex integration section.

The customer must provide the 3A Translator with 8-foot power cord. If using the V2 3A translator, the programming is done using setup switches located on the front panel of the 3A translator. If using the V1 3A translator, remove the cover to locate the 15 dip switches. Follow the 3A installation instructions to program according to your needs (for BCID, LCEN, etc.) and to plug in the power cord.

Note that the 3A must be configured for either seven- or 10-digit calling and called party IDs.

Connecting the 3A Translator

Connecting analog voice channels

7.1 INSTALLING THE VOICE LINES

☐ Each voice card supports four analog (Tip/Ring) connections. The voice path between the 5ESS and the INTUITY AUDIX LX ™ requires one pair in each RJ11 connection of the voice card. See to the installation instructions for the hardware connectivity.

- To ensure that the ports are physically connected correctly, ask the switch administrator to place calls to each individual INTUITY AUDIX LX ™ voice channel, one at a time. Use the **System Monitor** menu in the INTUITY AUDIX LX ™ to monitor that the correct channel is dialed from the switch.

Steps to verify our installation when complete

7.3 TESTING THE INSTALLATION

☐ Create two mailboxes associated with two test extensions. Record a name and personal greeting for each mailbox.

☐ By using one test extension, call the other test extension. You need to hear the appropriate greeting (see “Test call coverage scenarios” which follows).

Test call coverage scenarios:

▪ **Forward all calls**: When a subscriber forward all calls to the INTUITY AUDIX LX ™ number, calls placed to the subscriber should follow the correct INTUITY AUDIX LX ™ prompt should be played for that subscriber.

▪ **Busy:** Place a call to a busy extension. This call has to follow the right coverage path and INTUITY AUDIX LX ™ must play the Busy greeting.

▪ **Ring-no-answer**: Place a call to a station that is ring-no-answer. This call has to follow the right coverage path and INTUITY AUDIX LX ™ must play ring-no-answer greeting.

☐ If calls are Non-Integrated, check

▪ That the appropriate COS has been assigned to the Tip/Ring lines.

▪ That the PBX Extn to Channel mapping has been administered properly.

▪ The Switch Integration log to make sure the RAW data is seen for every call and is appropriately parsed and translated.

▪ The maintenance log to verify that an error has been logged indicating Bad data. If yes, then check the switch setup to ensure that the correct mode codes are being passed to INTUITY AUDIX LX ™ .

▪ The Dial Plan Translation screen to verify that the translation table has been administered correctly.

☐ For message-waiting indicators, listen to the message left for the test mailbox, delete the message, and verify that message waiting is turned off.

If Message Waiting failures occur, check the following:

▪ That the appropriate COS has been administered on the switch or the subscriber telephone sets.

▪ The Switch Integration Log to verify that INTUITY AUDIX LX ™ is dialing out the required sequence of digits. If not, check the DIAL PLAN Translation and make sure that it is administered correctly.

▪ That dial tone is being detected by INTUITY AUDIX LX ™.

☐ Test Transfers by using the *T option from the Audix mailbox, transfer to another mailbox. Monitor the transfer time. Transfer to a station that is in a Do-Not-Disturb mode, busy mode, RNA mode.

▪ The transfer time is approximately from 5 to 8 seconds.

▪ Test multiple transfers. Set up phone A to transfer to Phone B. Phone B then transfers to phone C, and phone C transfers to phone D. Determine how many transfers can be supported on the switch.

If Transfer failures are encountered, then check the following:

▪ That the flash duration that is set on INTUITY AUDIX LX ™ is the same as that configured on the switch. If not, then modify the flash duration.

▪ That the transfer type is set on the change system- parameters feature form.

NOTE: If the caller is disconnected during transfers, then the flash duration is too high and has to be reduced. If the caller hears INTUITY AUDIX LX dialing digits during transfer, then the flash duration is too low and has to be increased.

- ☐ Call Disconnect. Leave a message for the test mailbox, retrieve the message, and listen for the call progress tones. Place an external call and document the time that it takes the INTUITY AUDIX LX ™ to disconnect after the caller hangs up.

  ▪ If there is no progress tone in the message, disconnect is working fine.

- ☐ Zero ("0") Out. Verify that return-to-operator works properly.

- ☐ Call the INTUITY AUDIX LX ™ from a test extension and leave a message for a station with a voice mail button.

  ▪ If the subscriber stations are programmed to support a button that will dial the voice mail access number and the mailbox number followed by the # sign, the INTUITY AUDIX LX ™ will prompt for the password. The system will play "Please enter your password".

- ☐ Automated Attendant. Call the automated attendant mailboxes.

  ▪ If the correct Auto-Attendant mailbox is not reached and all the previously described tests passed, the most likely problem will be in the switch translations. Check with the system administrator to Ensure proper translation.

- ☐ Set up outcall notification in the test mailbox and leave a message to generate an outcall. Make sure that the ports are configured for Outcall.

  ▪ INTUITY AUDIX LX ™ must call the number administered for outcalling after the administered time has passed.

  ▪ If Outcalling failures occur, check if the dial tone is being detected by INTUITY AUDIX LX ™.

- ☐ Incoming and Outgoing Fax.

  ▪ Send a fax to a subscriber mailbox from a fax machine. Click the **Start** key on the fax machine. Check that the fax arrived in the mailbox and print the fax.

  ▪ Send a fax from a subscriber's mailbox to a fax machine. Check the fax machine to make sure that the fax was received.

NOTE: If you encounter problems while performing these tasks, review the "switch log" before escalating problems to your local Technical Support Center.

8.0 CONSIDERATIONS

Important notes regarding this integration

8.1 Support of the reply to internal-telephone answering message feature might require seven-digit mailboxes. The 3A Translator sends the seven-digit phone number of the calling party as part of the data message across the link even if the caller is not within the Centrex group associated with the data link (provided the caller is within the same #5ESS).

8.2 A 202T modem is required as part of the data link configuration if the INTUITY AUDIX LX ™ is located more than 50 feet from the serving switch.

8.3 The cabling requirements for the 5ESS integration's differ depending upon which device is used (3A translator or 3B processor). When changing from one device to another, the cabling must also be changed.

8.4 Placement of the modems in the circuit is determined by the location of the 3A translator unit. If the 3A translator resides in the central office, one modem will be connected to the 3A translator and the other modem will be connected to the INTUITY AUDIX LX ™. If the 3A translator is located with the INTUITY AUDIX LX ™, one modem will be connected to the switch and the other modem will be connected to the 3A translator that is attached to the INTUITY AUDIX LX ™ System.

©2008 AVAYA Inc. All rights reserved. All trademarks identified by the ®, SM and TM are registered trademarks, servicemarks or trademarks respectively. All other trademarks are properties of their respective owners. The above information is based on knowledge available at the time of publication and is subject to change without notice. Printed in U.S.A.

AVAYA Inc.
1033 Murphy Blvd
Milpitas, CA 95035
(408) 577-7000
http://www.avaya.com

Change History		
Revision	Issue Date	Reason for Change
Version A	5/22/08	Initial release
RIP	02/23/10	Made CN RIP