Meridian 1

# ISDN Primary Rate Interface

Installation

Document Number: 553-2901-201
Document Release: Standard 7.00
Date: January 2002



Printed in Canada

# Revision history

**January 2002**

Standard 7.00. This document is up-issued to to include content changes for Meridian 1 Release 25.40.

**April 2000**

Standard 6.00. This is a global document and is up-issued for X11 Release 25.0x. Document changes include removal of: redundant content; references to equipment types except Options 11C, 51C, 61C, and 81C; and references to previous software releases.

**June 1999**

Issue 5.00 released as Standard for Generic X11 Release 24.2x.

**October 1997**

Issue 4.00 released as Standard for Generic X11 Release 23.00

**December 1995**

Issue 3.00 released as Standard for Generic X11 Release 21.1x

**August 1995**

Issue 2.00 released as Standard for Generic X11 Release 21.xx

**August 1994**

Issue 1.00 released as Standard for Generic X11 Release 20.00

**August 1993**

This document is the standard release for Phase 8b.

**October 1992**

This document is the standard release for Phase 7C.

**June 1992**

This publication is the standard release for Phase 7B.

# Contents

# About this document

This document supports Meridian 1 Internet Enabled systems.

This document is a global document. Contact your system supplier or your Nortel Networks representative to verify that the hardware and software described is supported in your area.

This document describes the basic hardware and the associated installation procedures needed to equip ISDN PRI on Meridian 1 Internet Enabled system Options 51C, 61C, and 81C.

> ***Note:*** For Option 11C specific information, refer to *Option 11C 1.5Mb DTI/PRI* (553-3011-310) and *Option 11C 2.0Mb DTI/PRI* (553-3011-315).

# ISDN Primary Rate Interface equipment overview

## Contents

The following are the topics in this section:

## Reference list

The following are the references in this section:

- *Meridian Link ISDN/AP General Guide* (553-2901-100)
- *Option 11C 1.5Mb DTI/PRI* (553-3011-310)
- *Option 11C 2.0Mb DTI/PRI* (553-3011-315)

## Introduction

This chapter describes the basic hardware needed to equip ISDN PRI on Meridian 1 system Options 51C, 61C, and 81C.

> ***Note:*** For Option 11C specific information, refer to *Option 11C 1.5Mb DTI/PRI* (553-3011-310) and *Option 11C 2.0Mb DTI/PRI* (553-3011-315).

## Primary Rate Interface (PRI) hardware requirements

The following hardware is required to equip ISDN PRI on Meridian 1 system Options 51C, 61C, and 81C:

- NT6D11(AB/AE/AF) D-Channel Interface (DCH) card (for 2.0 Mb PRI)
- QPC757 D-channel Interface (DCH) for (1.5 Mb PRI)

- NT6D80 Multipurpose Serial Data Link (MSDL) card
- NTBK51 Downloadable D-Channel Daughterboard (DDCH), used as an option to the NT6D80 MSDL with the NTCK43 dual-port PRI2 card, the NT5D97 dual-port DTI2/PRI2 card, or the NT5D12 dual-port 1.5 Mb DTI/PRI card
- NT8D72 (AB/BA) PRI2 card
- NTCK43 dual-port PRI2 card
- NT5D97 dual-port DTI2/PRI2 card
- QPC720 1.5 Mb PRI card
- NT5D12 dual-port 1.5 DTI/PRI card
- QPC471 or QPC775 Clock Controller

  ***Note:*** The QPC775 Clock Controller is currently not available for U.S. markets. The QPC471 and QPC775 Clock Controllers cannot be mixed in one system. Vintages A through G of the QPC471 Clock Controller can be used in one system; vintage H of QPC471 Clock Controllers cannot be mixed with Clock Controllers of other vintages.

Additional hardware is also required for PRI capability and applications. Installation instructions are given in other Nortel Networks publications, or supplied by the manufacturer. This additional hardware includes:

- QPC414 Network card
- Channel Service Unit (CSU)
- Echo canceller
- ROM circuit card requirements:
  - the QPC939A for Option 1C
  - the QPC939A for option 61C

  ***Note:*** Option 81C ROM requirements are fulfilled by the NT6D66 Call Processor (CP) card.

- QMT8 Asynchronous Data Module (ADM)

See Figure 1 for a representation of the basic PRI system hardware.

***Note:*** This illustration shows a basic configuration, not the dual-port NT5D12 DTI/PRI card, nor the associated dual-port NTBK51AA Downloadable D-Channel daughterboard.

**Figure 1**
**PRI hardware (shown without downloadable PRI and DCH cards**

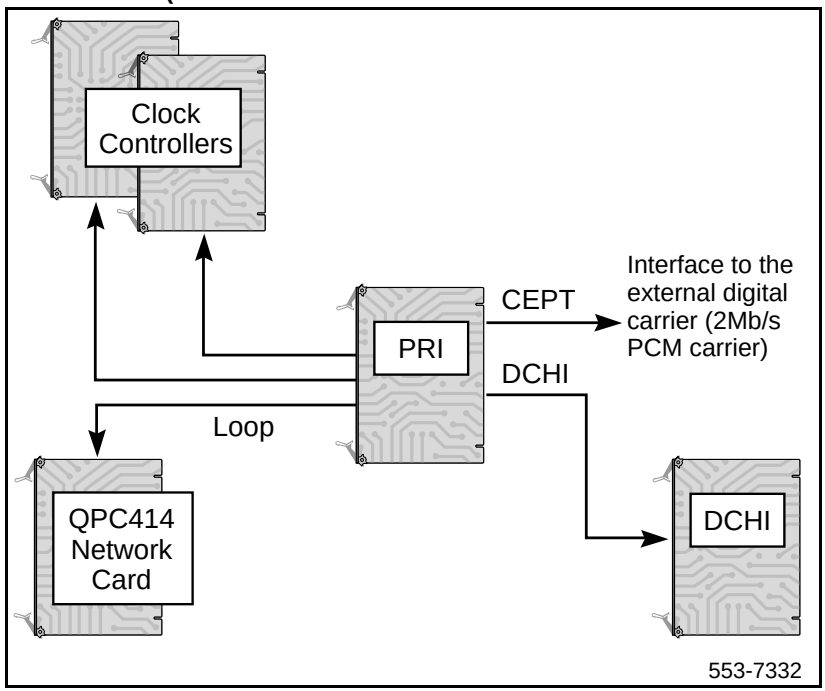


## ISDN Signaling Link (ISL) hardware

The following hardware is required for ISDN Signaling Link (ISL) capability and applications.

Equipment required for shared mode capability:

- NT6D11(AB/AE/AF) D-Channel (DCH) card (for 2.0 Mb PRI)
- QPC757 D-channel (DCH) for (1.5 Mb PRI)
- NT6D80 Multipurpose Serial Data Link (MSDL) card

- NTBK51 Downloadable D-Channel Daughterboard (DDCH), used as an option to the NT6D80 MSDL with the NTCK43 dual-port PRI2 card, the NT5D97 dual-port DTI2/PRI2 card, or the NT5D12 dual-port 1.5 Mb DTI/PRI card
- NT8D72 (AB/BA) PRI2 card
- NTCK43 dual-port PRI2 card
- NT5D97 dual-port DTI2/PRI2 card
- QPC720 1.5 Mb PRI card
- NT5D12 dual-port 1.5 DTI/PRI card
- QPC471 or QPC775 Clock Controller

Equipment required for dedicated mode using leased lines:

- NT6D11(AB/AE/AF) D-Channel (DCH) card (for 2.0 Mb PRI)
- QPC757 D-channel (DCH) for (1.5 Mb PRI)
- NT6D80 Multipurpose Serial Data Link (MSDL) card
- NTBK51 Downloadable D-Channel Daughterboard (DDCH), used as an option to the NT6D80 MSDL
- modem set in synchronous mode

Equipment required for dedicated mode using a dial-up modem:

- NT6D11(AB/AE/AF) D-Channel (DCH) card (for 2.0 Mb PRI)
- QPC757 D-channel (DCH) for (1.5 Mb PRI)
- NT6D80 Multipurpose Serial Data Link (MSDL) card
- NTBK51 Downloadable D-Channel Daughterboard (DDCH), used as an option to the NT6D80 MSDL
- modem with auto-dial capability

***Note:*** This configuration is the least reliable due to lockup problems inherent in Smart Modems from power spikes and noisy lines. To increase the reliability on this configuration, use a constant power source when powering the modems. Also, verify that TIE lines meet data grade specifications. Nortel Networks takes no responsibility for ISL D-Channel outages due to modem lockup.

- 500 set line card
- QPC71 2W Tie, or QPC237 4W Tie E&M

Equipment required for dedicated mode using a DTI/DTI2 trunk:

- NT6D11(AB/AE/AF) D-Channel (DCH) card (for 2.0 Mb PRI)
- QPC757 D-channel (DCH) for (1.5 Mb PRI)
- NT6D80 Multipurpose Serial Data Link (MSDL) card
- NTBK51 Downloadable D-Channel Daughterboard (DDCH), used as an option to the NT6D80 MSDL
- QPC536 DTI2 card, or NTCK43 dual-port PRI2 card or NT5D97 dual-port DTI2/PRI2 card
- QPC472 1.5 Mb DTI card or NT5D12 dual-port 1.5 DTI/PRI card
- QMT8 Asynchronous Data Module (ADM), QMT11 Asynchronous/Synchronous Interface Module (ASIM) or QMT21 High Speed Data Module (HSDM)
- Data line card

### 64 Kb/s Clear Data Hardware

The QMT21 High Speed Data Module (HSDM) is required in the clear-data pathway to support the 64Kb/s clear-data function. One module is required at each Meridian 1 end of any connection.

## D-Channel Handler description

This section provides descriptions of the D-Channel (DCH) cards, the MSDL card, and the Downloadable D-Channel Daughterboard.

# NT6D11 DCH

## Power requirements

The power requirements for the NT6D11AB/11AE/AF DCH are:

+5 volts at 3 amperes

+12 volts at 75 milliamperes

-12 volts at 75 milliamperes

## DCH/PRI interface

The NT6D11AB/AE/AF DCHs connect to the PRI2 cards by means of a special RS422 cable, the QCAD328A, which is a special RS422 cable; refer to “QCAD328” on page 259 of the Cabling chapter for more details.

## DCH faceplate

NT6D11AB/AE/AF DCHs have one light-emitting-diode (LED), to indicate an active or inactive state, and two external connectors:

- Port J1 is a standard asynchronous port providing an interface for non-PRI applications.

  ***Note:*** This connection will not support an Add-on Data Module (ADM) terminal.

- Port J2 is the D-Channel Interface port.

Figure 2 shows the faceplate layout.

**Figure 2**
**NT6D11 DCH faceplate layout**

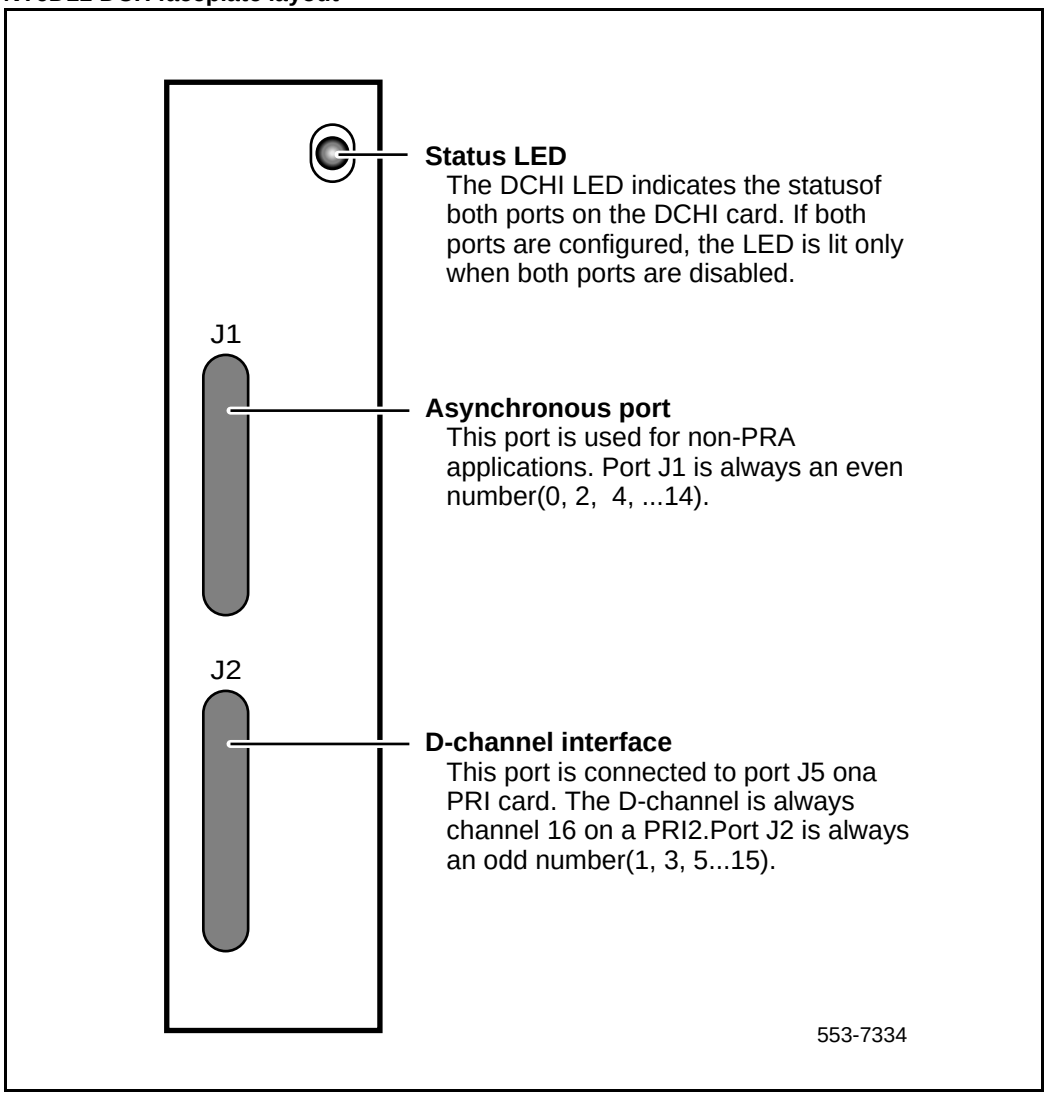

# QPC757 DCH

## Power requirements

The power requirements for the QPC757 DCH are:

+5 volts at 3 amperes
+12 volts at 50 milliamperes
–12 volts at 50 milliamperes

## DCH/PRI interface

The QPC757 DCH connects to the QPC720 PRI via a RS-422 cable. The following signals are transmitted across the interface:

RCV DATA
RCV CLOCK
XMIT CLOCK
XMIT READY
PRI READY
DCH READY

PRI READY and DCH READY are handshake signals.

## QPC757 faceplate

The QPC757 DCH, as shown in Figure 3, has one light emitting diode (LED) to indicate an active or inactive state and two external connectors as follows:

**1** Port J1 is a standard asynchronous port in LD 48

***Note:*** This connection does not support an Add-on Data Module (ADM) terminal.

**2** Port J2 is the D-Channel Interface port.

***Note:*** A QPC757 vintage C is required if the ISL Revert to Conventional Signaling feature is configured. The QPC757 vintage D is recommended for combination ISL/PRI networks using NACD or Network Message Services and ISL networks using modems.

**Figure 3**
**QPC757 DCH faceplate layout**

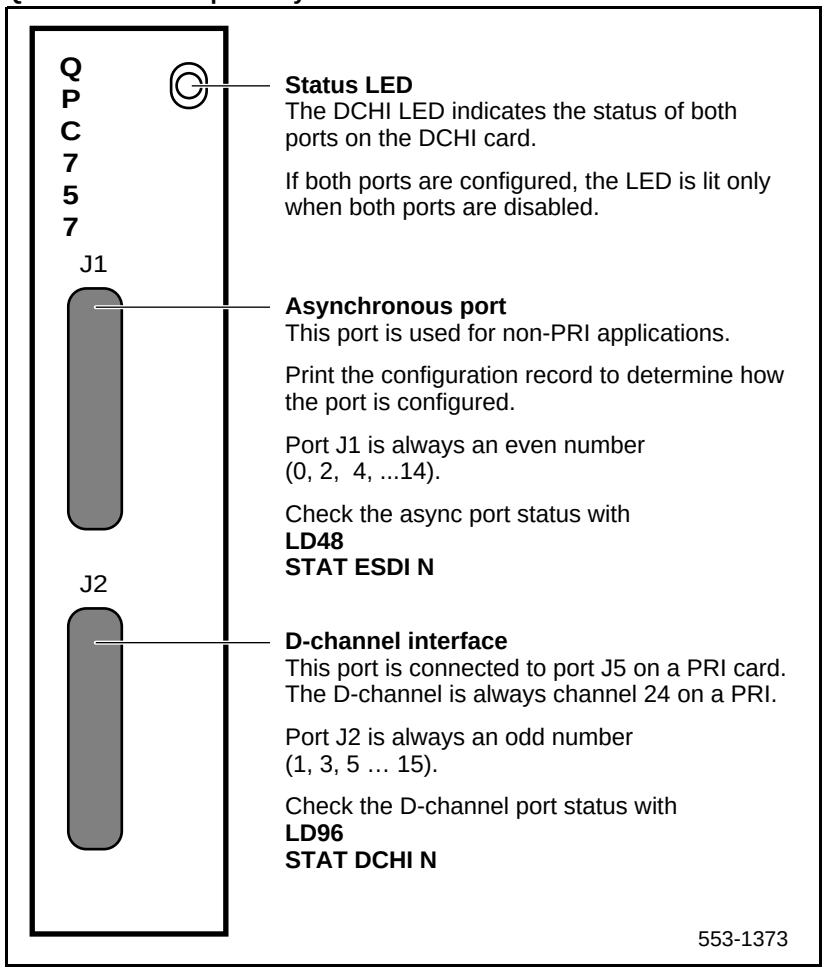


## NT6D80 MSDL

The NT6D80 MSDL card can be used in conjunction with, or independently from, the QPC757, or NT6D11AB/AE/AF DCH.

## Power requirements

The NT6D80 MSDL power requirements are:

| Voltage (VAC) | Current (Amps) | Power (Watts) | Heat (BTUs) |
|---|---|---|---|
| +5 | 3.20 | 16.00 | 55.36 |
| +12 | 0.10 | 1.20 | 4.15 |
| -12 | 0.10 | 1.20 | 4.15 |

## MSDL/PRI interface

MSDL can connect to PRI trunks through RS-422 or RS-232 interfaces. The interfaces are switch configured.

## MSDL faceplate

The NT6D80 MSDL has one light-emitting-diode (LED) to indicate an active or inactive state and four external connectors. Each port can be RS-422 or RS-232 connectors, with either DCE or DTE interfaces. Refer to Figure 4.

**Figure 4**
**NT6D80 MSDL faceplate layout**

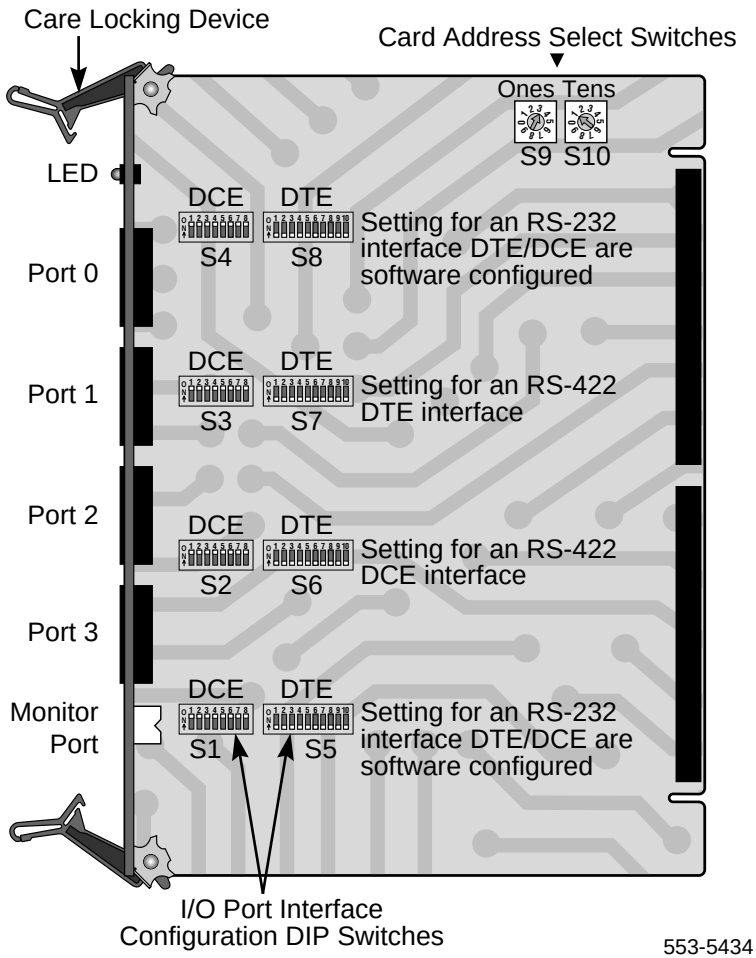

# NTBK51 Downloadable D-Channel Daughterboard

The NTBK51 is a two port Downloadable D-Channel Daughterboard (DDCH) that has been introduced as an option to the NT6D80 MSDL with the NTCK43 dual-port PRI2 card, the NT5D97 dual-port DTI2/PRI2 card, or the NT5D12 dual-port 1.5 Mb DTI/PRI card.

The NTBK51 supports all the features of the existing 4 port MSDL (NT6D80), and eliminates the need for an external DCH card and associated cables for MSDL applications. The NTBK51 can support a maximum of 32 (16*2) MSDL type D-Channels per system, unlike the MSDL which can support a maximum of 64.

> ***Note 1:*** Only one version, the NTBK51AA, can be used with the NTCK43, the NT5D97, or the NT5D12. The NTBK51BA version has only 30+30 pin connectors (instead of 40+30 pins in the AA version). The missing 10 pins in the BA version prohibits the use of port 0 on the NTCK43, the NT5D97, or NT5D12 card.
>
> ***Note 2:*** The software allocation for NTBK51AA DDCH is similar to the MSDL. It is both physical and logical, and supports D-Channel functionality only.
>
> ***Note 3:*** Port 0 has to be an even loop on the DDP2, and Port 1 has to be an odd loop. Port 2 and Port 3 should not be configured.

The connection between the dual-port cards and the DDCH daughterboard is made using two headers: one 30 pin and one 40 pin connector.

# Standard PRI cards

This section provides a description of the standard ISDN PRI cards, namely the NT8D72 (AB/BA) PRI2 card, and the QPC720 1.5 Mb PRI card.

# NT8D72 PRI2

## Power requirements

The NT8D72AB and NT8D72BA PRI use power and ground connections from the backplane. Power requirements are:

+5 volts at 4 amperes

+12 volts at 50 milliamperes

-12 volts at 50 milliamperes

## NT8D72 faceplate

The NT8D72 contains five LEDs and six external connectors. Figure 5 shows the faceplate layout.

**Figure 5**
**NT8D72 PRI faceplate layout**

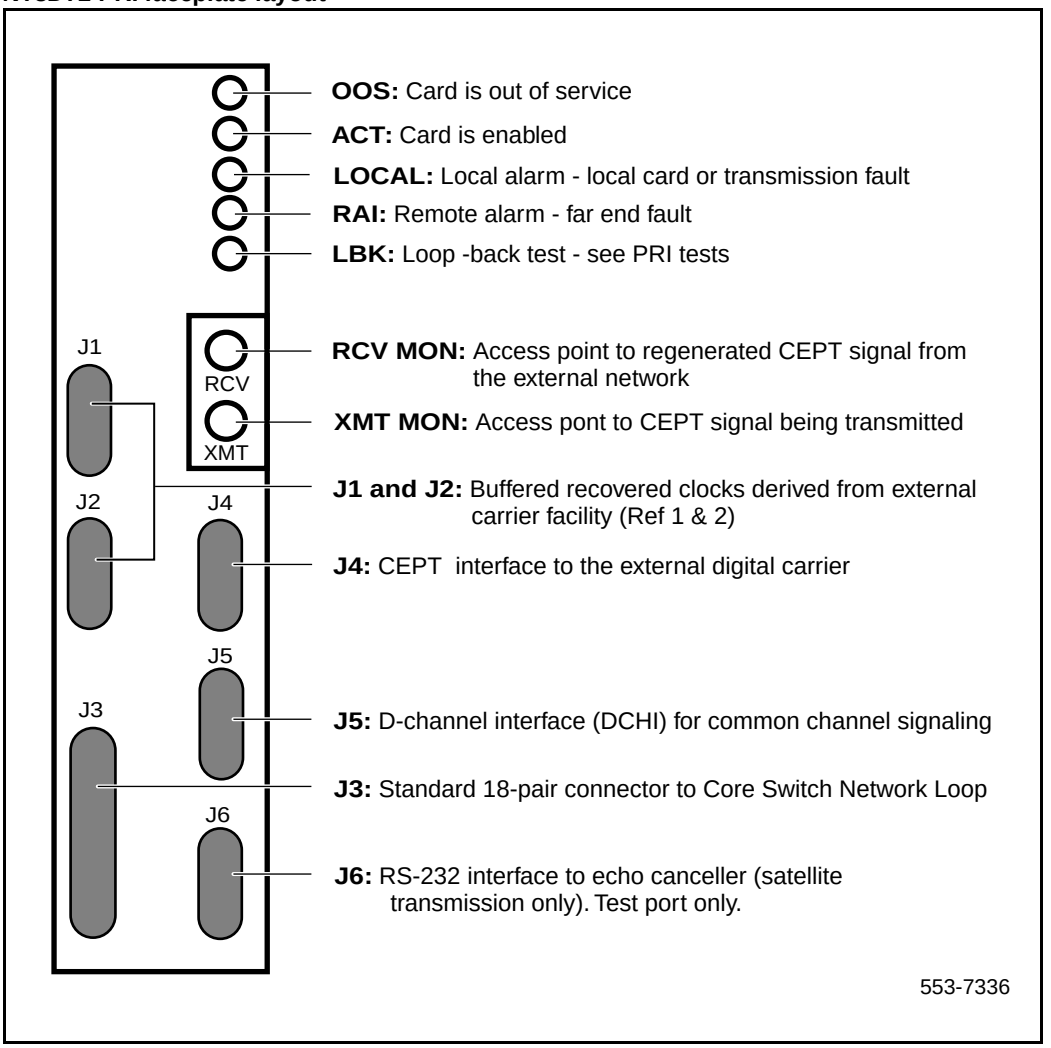

Table 1 gives information about the external connectors located on the NT8D72 PRI2 faceplate.

**Table 1**
**NT8D72 PRI External connectors**

| Faceplate Destination | Type | Description |
|---|---|---|
| J1 | 9-pin female, D-connector | Reference Clock 0 interface |
| J2 | 9-pin female, D-connector | Reference Clock 1 interface |
| J3 | 36-pin connector | Loop interface |
| J4 | 15-pin male, D-connector | External digital trunk |
| J5 | 15-pin male, D-connector | D-Channel interface |
| J6 | 15-pin female, D-connector | Echo Canceller/RS-232 interface |
| RCV MON | Miniature bantam jack | Monitor DSI from network |
| XMT MON | Miniature bantam jack | Monitor DSI from PRI |

## Cable requirements

Table 2 lists the types of cable used and the lengths required for internal and external NT8D72 PRI2 connections.

***Note:*** No additional cabling is required for nB+D configurations. Multiple PRIs and the D-Channel are associated through software in Overlay 17, prompt PRI.

**Table 2**
**NT8D72AB and NT8D72BA PRI: Cables and cable lengths (Part 1 of 2)**

| Cable Type | From | To | Maximum length (meters) |
|---|---|---|---|
| NT8D79AA | PRI card | Clock controller (CC-0) | 2.13 |
| NT8D79AA | PRI card | Clock controller (CC-1) | 2.13 |
| QCAD328A | PRI card | DCH card | 1.8 |

**Table 2**
**NT8D72AB and NT8D72BA PRI: Cables and cable lengths (Part 2 of 2)**

| | | | |
|---|---|---|---|
| QCAD328B | PRI card | DCH card | 5.5 |
| QCAD328C | PRI card | DCH card | 10.67 |
| QCAD328D | PRI card | DCH card | 15.24 |
| NTND26AA | PRI card | MSDL | 1.8 |
| NTND26AB | PRI card | MSDL | 5.5 |
| NTND26AC | PRI card | MSDL | 10.67 |
| NTND26AD | PRI card | MSDL | 15.24 |
| NT8D85AB | PRI card Network | Network Card | 15.24 |
| RS-232 | PRI card | Echo canceller | 15.24 |
| NT8D7207 | PRI card | I/O panel | 3.05 |
| NT8D7205 | I/O panel | crossconnect | 15.24 |

## Carrier interface

The NT8D72 PRI2 provide an interface to the 2Mb external digital line either directly or through an office repeater, echo canceller or line terminating unit (LTU).

## Echo canceller interface

Echo cancellers are required only on satellite transmission circuits. The echo canceller detects the length of the loop, and then cancels out reflected transmission. (Callers will not hear echoes of their own voices reflecting back to them from the far end of the call.)

The echo canceller's control protocol must conform with that of the Tellabs Model 251. Both the echo canceller and the PRI circuit card act as Data Terminal Equipment (DTE).

## QMT21 High Speed Data Module

The QMT21 High Speed Data Module supports the 64K Clear Data feature. (It allows data terminating equipment (DTE) to send and receive 64-Kb/s clear data.) The QMT21B is required for the Meridian 1 to Meridian 1 configurations.

## QPC720 PRI for 1.5/2.0 Mb gateway

On Meridian 1 systems which are being used as a 1.5/2.0 Mb Gateway, one or more QPC720 (1.5 Mb) Primary Rate Interface circuit cards will also be needed.

> ***Note:*** Older vintages of the QPC720 PRI can not be used for Gateway applications. The 1.5/2.0 Mb Gateway feature requires the use of a QPC720 circuit card with firmware updated to provide modified PAD values.

## Clock operation for the NT8D72

There are two types of clock operation—tracking mode and free-run mode.

### Tracking mode

In tracking mode, the PRI loop supplies an external clock reference to a clock controller. Two PRI loops can operate in tracking mode, with one defined as the primary reference source for clock synchronization, the other defined as the secondary reference source. The secondary reference acts as a back-up to the primary reference.

As shown in Figure 6, a Meridian 1 system with dual CPUs may have two clock controllers (CC-0 and CC-1). One clock controller acts as a back-up to the other. The clock controllers should be completely locked to the reference clock.

**Figure 6**
**Clock controller primary and secondary tracking**

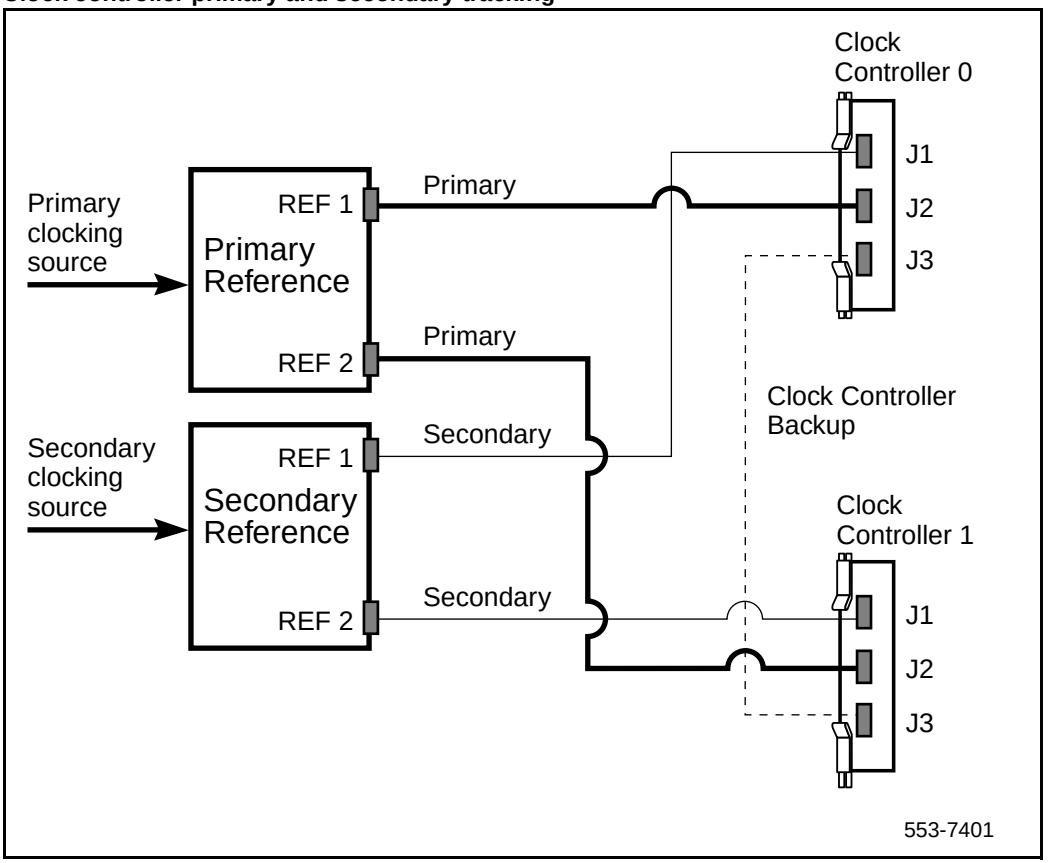


### Free run (non-tracking) mode

The clock synchronization of the Meridian 1 may operate in free-run mode if:

- no loop is defined as the primary or secondary clock reference,
- the primary and secondary references are disabled, or
- the primary and secondary references are in local alarm

### Reference clock errors

Meridian 1 software checks at intervals of 1 to 15 minutes to see if a clock controller or reference-clock error has occurred. (The interval of this check can be configured in Overlay 73.)

In tracking mode, at any one time, there is one active clock controller which is tracking on one reference clock. If a clock-controller error is detected, the Meridian 1 switches to the back-up clock controller, without affecting which reference clock is being tracked.

A reference-clock error occurs when there is a problem with the clock driver or with the reference clock at the far end. If the clock controller detects a reference-clock error, the reference clocks are switched.

### Automatic clock recovery

A command for automatic clock recovery can be selected in LD 60 with the command EREF.

A PRI loop is disabled when it enters a local-alarm condition. If the local alarm is cleared, the loop is enabled automatically. When the loop is enabled, clock tracking is restored in the following conditions:

**1** If the loop is assigned as the primary reference clock but the clock controller is tracking on the secondary reference or in free-run mode, it is restored to tracking on primary.

**2** If the loop is assigned as the secondary reference clock but the clock controller is in free-run mode, it is restored to tracking on secondary.

If the clock check indicates the switch is in free-run mode:

**1** Tracking is restored to the primary reference clock if defined.

**2** If the primary reference is disabled or in local alarm, tracking is restored to the secondary reference clock if defined.

***Note:*** If the switch was put into free-run mode intentionally by the craftsperson, it will resume tracking on a reference clock unless the clock-switching option has been disabled (LD 60, command MREF), or the reference clock has been "undefined" in the database.

### Automatic clock switching

If the EREF command is selected in Overlay 60, tracking on the primary or secondary reference clock is automatically switched in the following manner:

**1** If software is unable to track on the assigned primary reference clock, it switches to the secondary reference clock and sends appropriate DTC maintenance messages.

**2** If software is unable to track on the assigned secondary reference clock, it switches to free run.

# QPC720 PRI

The QPC720 PRI card is required for PRI operation in all machine types.

## Power requirements

The QPC720 PRI uses power and ground from the backplane. This card does not require an intelligent bus. Power requirements are:

+5 volts at 6 amperes

+12 volts at 50 milliamperes

–12 volts at 50 milliamperes

## QPC720 faceplate

QPC720 PRI contains five LEDs and six external connectors. Figure 7 shows the QPC720 PRI faceplate layout. Table 3 gives information about the external connectors located on the QPC720 PRI faceplate.

**Figure 7**
**QPC720 PRI faceplate layout**

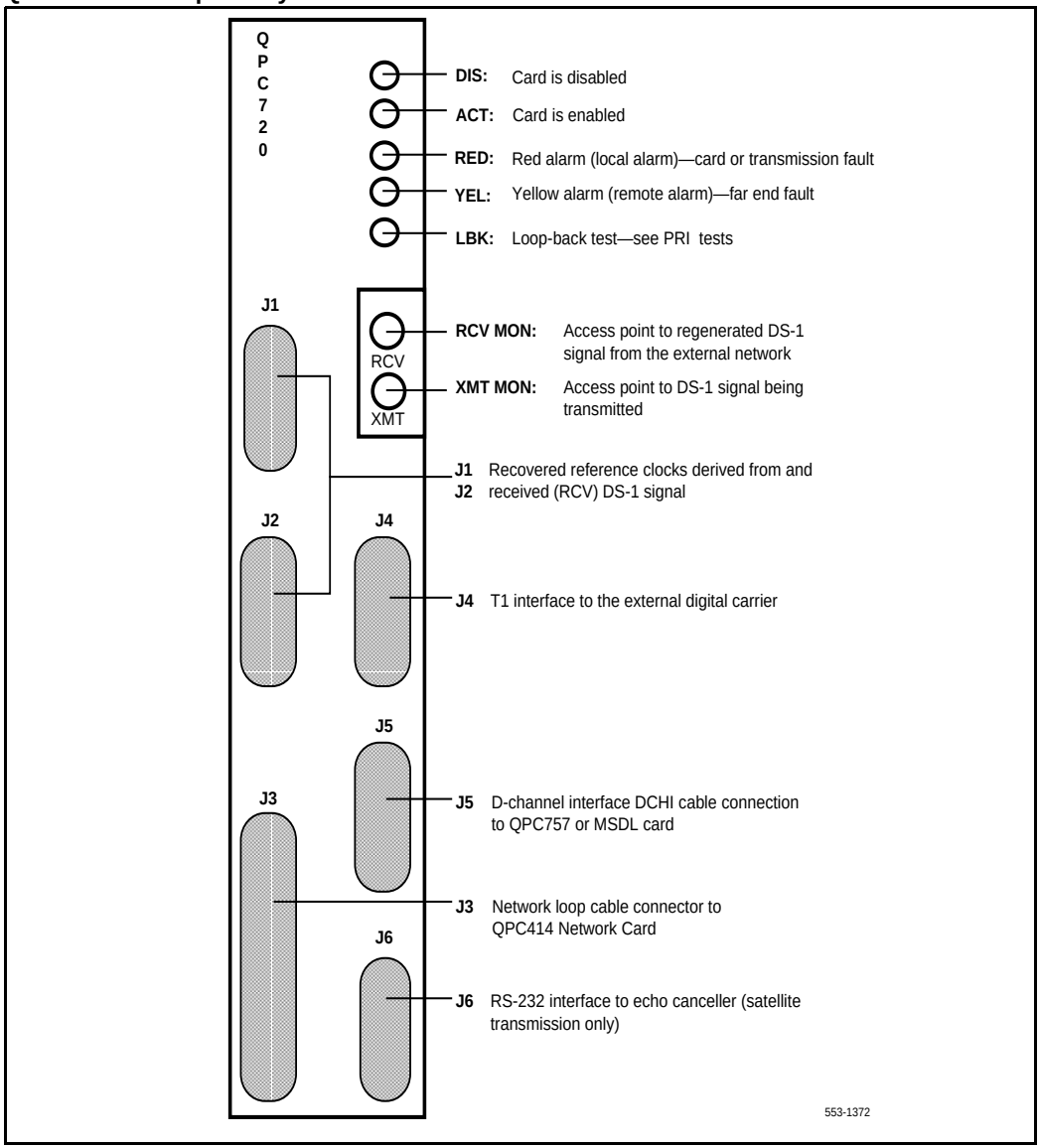

**Table 3**
**QPC720 PRI external connectors**

| Faceplate destination | Type |
|---|---|
| J1 | 9-pin female, D-connector |
| J2 | 9-pin female, D-connector |
| J3 | 36-pin connector |
| J4 | 15-pin male, D-connector |
| J5 | 15-pin male, D-connector |
| J6 | 15-pin female, D-connector |
| RCV MON | Miniature bantam jack |
| XMT MON | Miniature bantam jack |

## Cable requirements

Table 4 lists the types of cable used and the lengths required for external QPC720 PRI connections.

> ***Note:*** No additional cabling is required for nB+D configurations. Multiple PRIs and the D-channel are associated through software in LD 17, prompt PRI.

## Carrier interface

The QPC720 PRI provides an interface to the DS-1 Channel either directly, through an office repeater, or through an Echo Canceller.

The T1 Channel Service Units listed below are compatible with the QPC720 PRI card and the 64K Clear Data feature as well as with PRI connection parameters such as the Superframe format, the Extended superframe format, and the B7 and B8ZS Alternate Mark Inversion (AMI) line coding.

- Digital Link 551A
- Digital Link 551C
- Digital Link 551E

- Tellabs Model 441
- Verilink Model 551V ST

In the U.S.A., FCC Part 68 regulations require Network Channel Terminating Equipment (for example, the NT QRY551 Channel Service Unit) installed at of the point of connection between a system and a registered common carrier trunk.

## Echo Canceller interface

Echo Cancellers are required only with satellite transmission. The Echo Canceller detects the length of the loop, then cancels the reflected transmission (callers do not hear their own voices echoed).

The QPC720 PRI provides both a T1 line interface and a control interface to link to a signal format compatible with EIA standard RS-232-C. Both the PRI and the Echo Canceller act as Data Terminal Equipment (DTE). The Echo Canceller's control protocol must conform to that of the Tellabs Model 251.

## 64 T-link version 2 protocol

The QPC720 card supports the 64 T-link version 2 protocol. The QPC720 together with the QMT21 High Speed Data Module supports the 64K Clear Data feature. The QPC720 card provides a trunk that ties two switches together. This trunk allows 64K Clear Data to pass from the Meridian 1 to an outside network. The QMT21 module allows Data Terminal Equipment (DTE) to send and receive 64K Clear Data. See *Meridian Link ISDN/AP General Guide* (553-2901-100) for more information about the 64K Clear Data feature.

**Table 4**
**QPC720 PRI cables and cable lengths**

| Cable type | From | To | Maximum length (feet) | Maximum length (meters) |
|---|---|---|---|---|
| QCAD130 | QPC720 | QPC471/QPC775 (CC-0) | 7 | 2.13 |
| QCAD130 | QPC720 | QPC471/QPC775 (CC-1) | 7 | 2.13 |
| QCAD328A | QPC720 | QPC757 DCHI | 6 | 1.8 |
| QCAD328B | QPC720 | QPC757 DCHI | 18 | 5.5 |
| QCAD328C | QPC720 | QPC757 DCHI | 35 | 10.67 |
| QCAD328D | QPC720 | QPC757 DCHI | 50 | 15.24 |
| QCAD124 | QPC720 | QPC414 Network | 50 | 15.24 |
| QCAD128 | QPC720 | Bulkhead I/O panel | 25 | 7.62 |
| RS-232 | QPC720 | Echo Canceller | 50 | 15.24 |
| NTND26AA | QPC720 | NT6D80 MSDL | 6 | 1.8 |
| NTND26AB | QPC720 | NT6D80 MSDL | 18 | 5.5 |
| NTND26AC | QPC720 | NT6D80 MSDL | 35 | 10.67 |
| NTND26AD | QPC720 | NT6D80 MSDL | 50 | 15.24 |
| NTND98 | QPC720 | Input/output panel | 6 | 1.8 |
| 22AWG ABAM | Echo Canceller | DSX-1 | 655 | 199.64 |

***Note:*** The QPC775 Clock Controller is not available in the U.S.A. There can be no mixing of QPC775 and QPC471 in one system.

## Disk drive hardware

The following hardware is required for Meridian 1 Options 51C, 61C, and 81C system upgrades:

- 3.5-inch disk drive unit

- disk drive controller for above
- cable for above

***Note:*** Group F software (or any later issue) on an ST does not require a 3.5-inch disk drive. On this machine option, Group F software will function with the 5.25-inch disk drive.

See Table 5 for information on disk drive components.

**Table 5**
**3.5 inch disk hardware requirements**

| Product Code | Description |
|---|---|
| NT8D68AA | Floppy Disk Unit (FDU) |
| NTUD69AA | Mass Disk Unit (MDU) |
| QPC742D | Floppy Disk Interface (FDI) for FDU |
| QPC584E | Floppy Disk Interface (FDI) for MDU |
| NT8D77AB | Mass Storage Unit (MSU) interface cable (2 ft, 0.6m) |
| NT8D77AA | Mass Storage Unit (MSU) interface cable (3 ft, 0.9m) |
| NT8D77AC | Mass Storage Unit (MSU) interface cable (4 ft, 1.2m) |
| NT8D77AD | Mass Storage Unit (MSU) interface cable (5 ft, 1.5m) |

# Dual-port PRI cards

This section provides a description of the dual-port PRI cards, namely the NTCK43 dual-port PRI2 card, the NT5D97 dual-port DTI2/PRI2 card, and the NT5D12 dual-port 1.5 DTI/PRI card

# NTCK 43 Dual-port PRI2 card

The NTCK43 is a dual-port (two port) 2.0 Mb Primary Rate Interface card. It reduces the PRI footprint by integrating the functionalities of two NT8D72 PRI cards and one QPC414 ENET into one card. The NTCK43 occupies a single Network shelf slot providing two primary rate network connections.

## NTCK43 product compatibility

The NTCK43 DPRI supports all the functionality of the NT8D72BA PRI2 card, it is software independent. Earlier PRI cards may be mixed with the NTCK43 DPRI card on the same system type, where necessary.

Due to cabling limitations it is not possible on a specific Dual PRI to connect both MSDL and non MSDL D-Channel handlers when external DCHs are being used. e.g. It is not possible to have an MSDL D-Channel handler connected to Unit 0 and a NT6D11 type D-Channel handler connected to Unit 1.

## NTCK43 faceplate

The NTCK43 DPRI contain a set of vertical LEDs for each PRI Loop plus one Led giving the DDCH status. The faceplate includes five external connectors of which three are used by the customer. These are the Trunk connection P1, the external DCH connector P3 and the clock controller connector P4. Figure 8 shows the NTCK43 faceplate layout.

**Figure 8**
**NTCK43 DPRI faceplate**

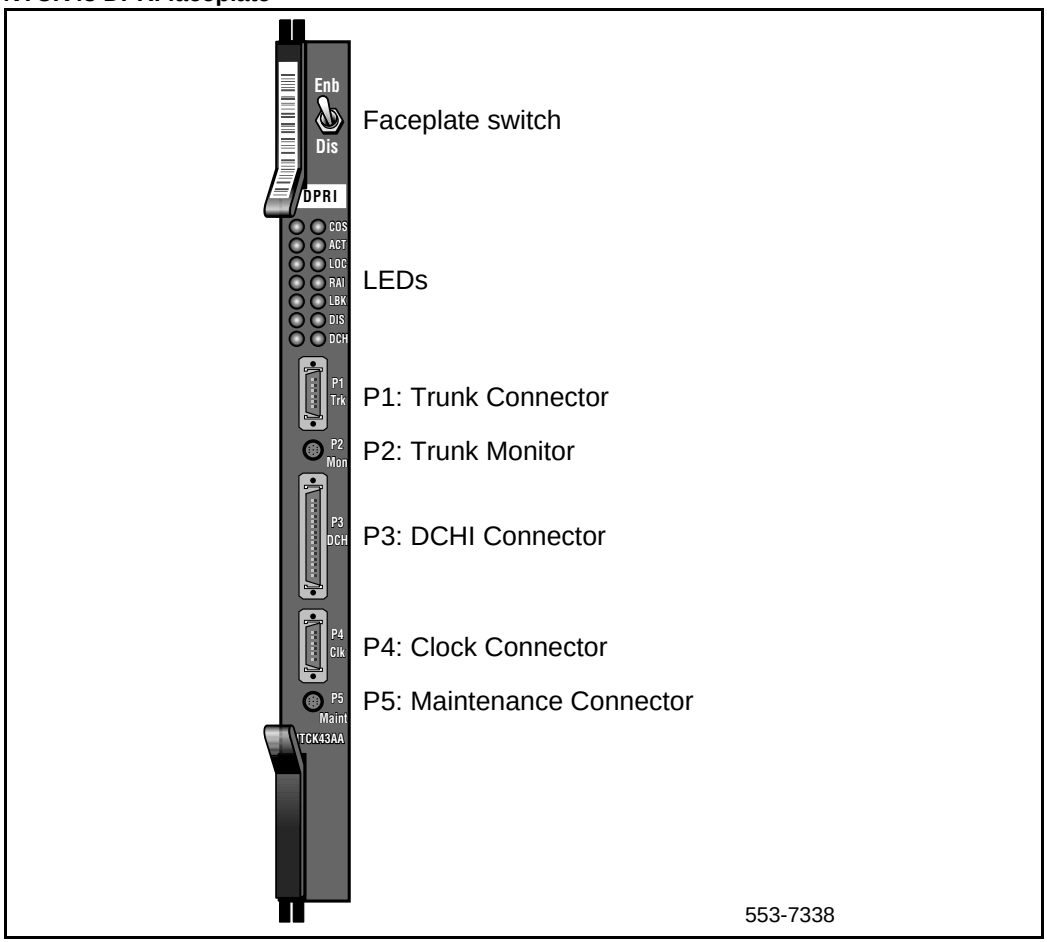

## NTCK43 external connectors

Table 6 gives information about the external connectors located on NTCK43 DPRI faceplate.

**Table 6**
**NTCK43 DPRI: External connectors**

| Faceplate Connector | Connector Type | Description |
|---|---|---|
| P1 | 9-pin female, D-connector | Dual External Trunk Connection |
| P2 | 9-pin female, DIN | Monitor Port |
| P3 | 26-pin female, D-connector | Dual DCH interface |
| P4 | 15-pin female, D-connector | Clock Controller Port |
| P5 | 9-pin female, DIN | Maintenance Port |

## NTCK43 LEDs

Table 7 gives information about the external connectors located on NTCK43 DPRI faceplate. A more detailed description of the LEDs follows.

**Table 7**
**NTCK43 DPRI LEDs**

| U0 | U1 | Abbr. | Description |
|---|---|---|---|
| Red | Red | OOS | Out of Service |
| Green | Green | ACT | Active |
| Red | Red | RED | Local Alarm |
| Yellow | Yellow | RAI | Remote Alarm |
| Green | Green | LBK | Loopback |
| Red | Red | DIS | Loop Status<br>(Off = Loop Enabled)<br>(ON = Loop Disabled) |
| Multi-Coloured | | DCH | DDCH Status<br>OFF = No DDCH Daughterboard Installed<br>Red = DDCH Disabled<br>Flashing Red = DDCH Download in Progress<br>Green = DDCH Enabled |

## LED descriptions

### OOS

This red LED indicates that the particular PRI channel is in an Out-of-Service state, having received either the "disable loop" or "enter Out-of-Service state" message from software. This is also the state of both channels after power-up, completion of self-test, and exiting remote loopback mode.

### ACT

This green LED indicates that the channel is in the active state, having received the "enable loop" message from software.

### RED

This red LED indicates that the channel is in the Local alarm state. This is the state when the channel has a local problem with the received CEPT signal such as Loss of signal, Loss of Multi-frame Alignment, or Loss of Frame Alignment.

### RAI

This yellow LED is turned on and off by firmware to indicate that the channel has received either an RAI or an AIS signal from the remote end and notified software that it has persisted but not yet cleared.

### LBK

This green LED indicates that the channel is in one of the various per loop loopback states.

### DIS

This red LED indicates that the Loop is disabled.

### DCH

This dual colour red/green LED indicates that the on-board DDCH is present (red) or is present and enabled (green).

## NTCK43 Cabling

This section lists the types of cable used and the lengths required for internal and external NTCK43 DPRI connections.

> ***Note:*** No additional cabling is required for nB+D configurations. Multiple DPRIs and the D-Channel are associated through software in Overlay 17, prompt PRI2.

### DPRI cables

The various cables associated with the Dual PRI are given below. Note that the D-Channel and Clock Controller cables have length variations to facilitate different configurations. These cable length variations match the lengths that are presently available for the NT8D72BA.

### *NTCK45AA*

**Figure 9**
**120 Ohm Dual PRI to I/O Panel cable (8ft).**

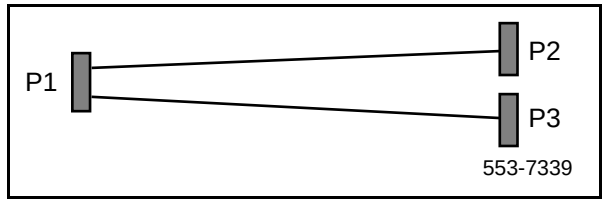


***Note:*** This cable is not used for ST Machines

Connector P2 supplies the PRI Trunk connection for Unit 0.

Connector P3 supplies the PRI Trunk connection for Unit 1.

### *NTCK78AA*

**Figure 10**
**120 Ohm Dual PRI cable for ST Machines (50ft).**

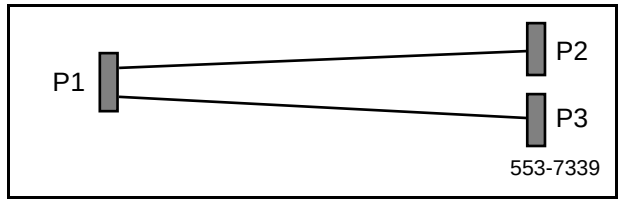


***Note:*** This cable is used for ST Machines only

Connector P2 supplies the PRI Trunk connection for Unit 0.

Connector P3 supplies the PRI Trunk connection for Unit 1.

***NTCK79AA***

**Figure 11**
**75 Ohm Dual PRI Coax Cable (40ft).**

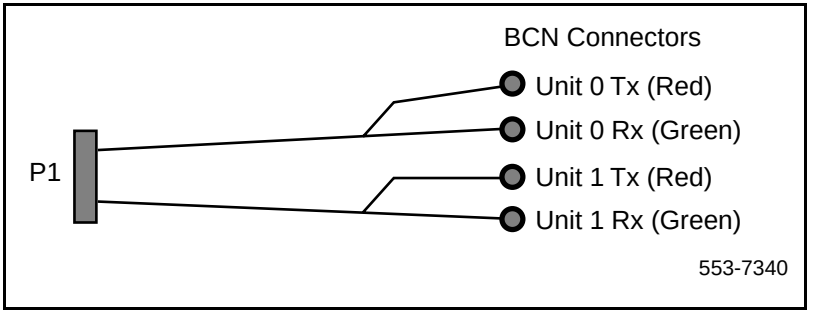


This cable is 75 Ohm Dual Coaxial cable which interfaces to P1 on the faceplate side and to external equipment such as an LIU

## External DPRI cable

***NT8D7217***

**Figure 12**
**Dual PRI I/O Panel to Multiplexer cable (50ft)**

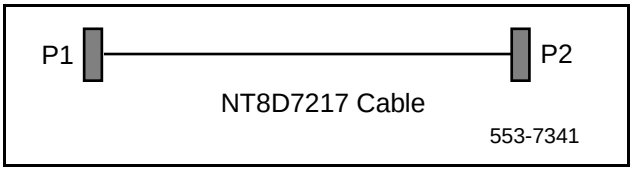


This cable is not used for ST Machines.

## External MSDL/DDCH D-Channel cables

***NTCK80AA***

Dual PRI to MSDL DCH cable (6ft)

***NTCK80AB***

Dual PRI to MSDL DCH cable (18ft)

***NTCK80AC***

Dual PRI to MSDL DCH cable (35ft)

***NTCK80AD***

**Figure 13**
**Dual PRI to MSDL DCH cable (50ft)**

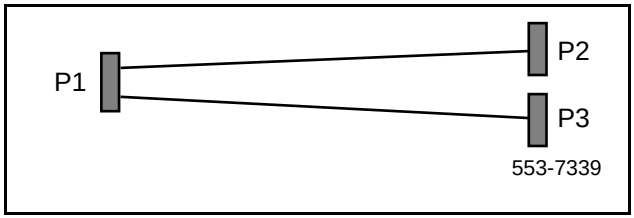


Connector P2 supplies the DCH connections for Unit 0.

Connector P3 supplies the DCH connections for Unit 1.

### Clock Controller cables (1 to 2 port cables)

***NTCK47AA***

Dual PRI to Clock Controller cable (2ft)

***NTCK47AB***

Dual PRI to Clock Controller cable (4ft)

***NTCK47AC***

Dual PRI to Clock Controller cable (6ft)

***NTCK47AD***

Dual PRI to Clock Controller cable (8ft)

### *NTCK47AE*

**Figure 14**
**Dual PRI to Clock Controller cable (10ft)**

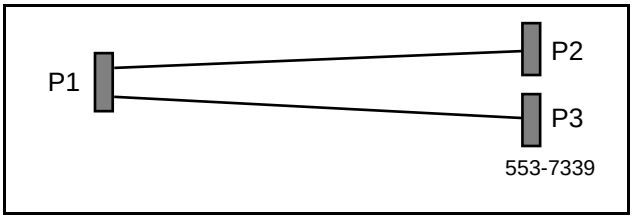


Cable NTCK47 is the clock control cable used for most configurations.The NTCK47 can be used for all clocking options that use a Single CPU.

It can also be used for all clocking options using a Dual CPU where a Dual PRI provides one of the references and the other reference is provided from a different source, that source being either a different Dual PRI, a NT8D72 PRI or a DTI.

## Clock Controller Cables (1 to 4 port cables)

### *NTCK81AA*

Dual PRI to Clock Controller cable (2ft)

### *NTCK81AB*

Dual PRI to Clock Controller cable (4ft)

### *NTCK81AC*

Dual PRI to Clock Controller cable (6ft)

### *NTCK81AD*

Dual PRI to Clock Controller cable (8ft)

***NTCK81AE***

Dual PRI to Clock Controller cable (10ft)

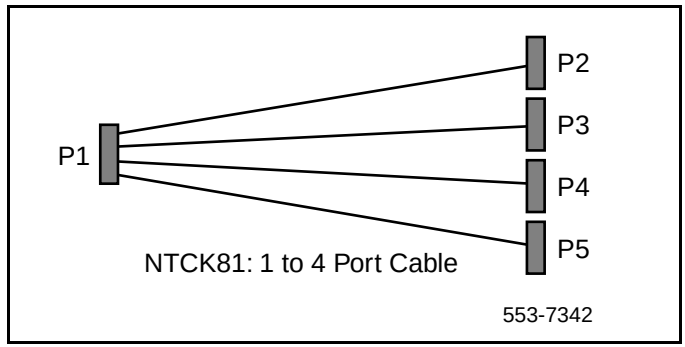


Cable NTCK81 is used only in the situation where 1 Dual PRI provides both references to both CPUs, i.e.. where the Dual PRI is the sole source of clocking references for the system. If a system has other PRIs installed (DPRIs or NT8D72) other than the Dual PRI, it is recommended that one of the clocking references be taken from that other source. This will de-risk the impact of a Dual PRI card failure on the system.

> ***Note:*** When the Dual PRI cabling is completed, any connector that remains unterminated should have a protective plastic sleeve placed over the connector, to protect it from dust or from coming into contact with other voltages. An example of this might be when all of the connectors on the NTCK47 cable were not terminated.

## NTCK43 DPRI carrier interface

The NTCK43 DPRI provide an interface to the 2.0 Mb external digital line either directly or through an office repeater, line terminating unit (LTU), or Channel Service Unit (CSU). This is depicted by Figure 15.

**Figure 15**
**Carrier Interface**

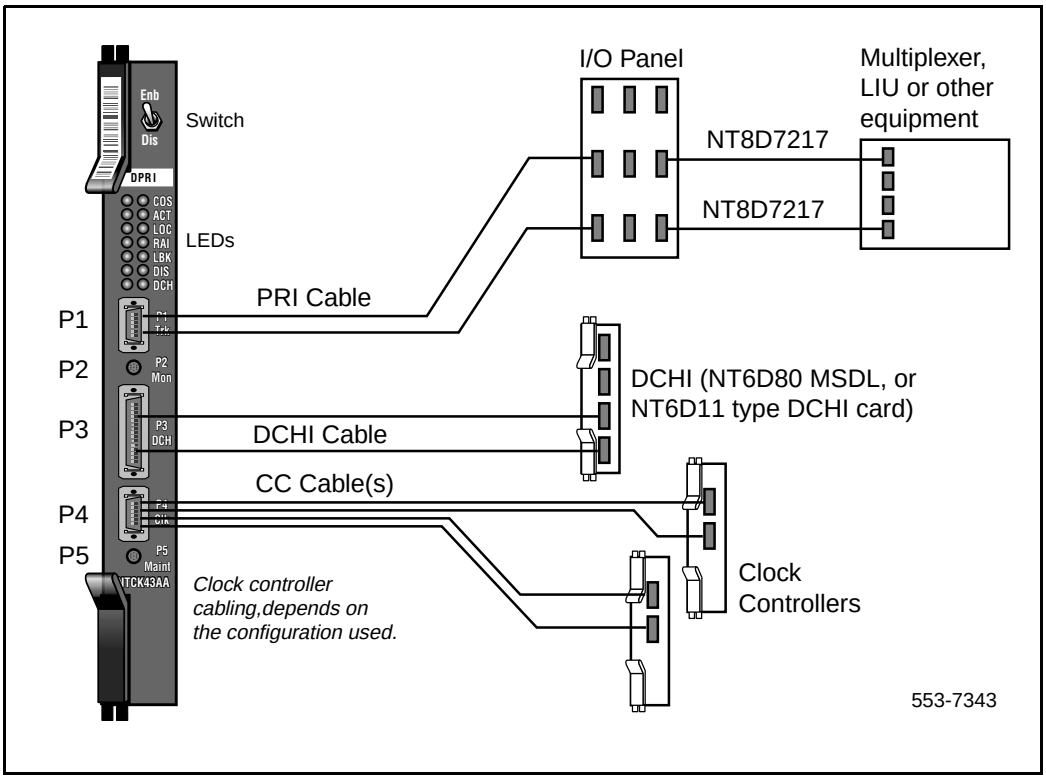


## Clock for the NTCK43

### Clock operation

There are two types of clock operation - tracking mode and free-run mode.

#### *Tracking mode*

In tracking mode, the DPRI loop supplies an external clock reference to a clock controller. Two DPRI loops can operate in tracking mode, with one defined as the primary reference source for clock synchronization, the other defined as the secondary reference source. The secondary reference acts as a back-up to the primary reference.

As shown in Figure 16, a Meridian 1 system with dual CPUs may have two clock controllers (CC-0 and CC-1). One clock controller acts as a back-up to the other. The clock controllers should be completely locked to the reference clock.

**Figure 16**
**Clock controller, primary and secondary tracking**

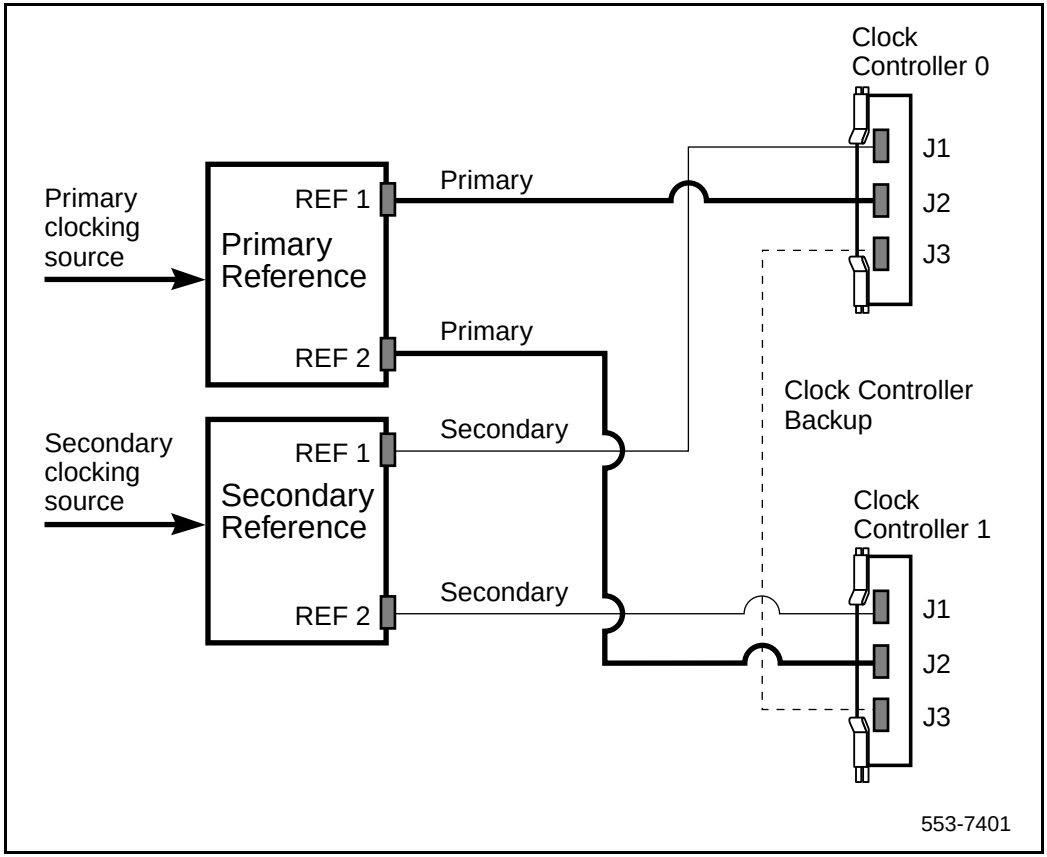


### *Free run (non-tracking) mode*

The clock synchronization of the Meridian 1 may operate in free-run mode if:

- no loop is defined as the primary or secondary clock reference,
- the primary and secondary references are disabled, or
- the primary and secondary references are in local alarm.

### Reference clock errors

Meridian 1 software checks at intervals of 1 to 15 minutes to see if a clock-controller or reference-clock error has occurred. (The interval of this check can be configured in Overlay 73.)

In tracking mode, at any one time, there is one active clock controller which is tracking on one reference clock. If a clock-controller error is detected, the Meridian 1 system switches to the back-up clock controller, without affecting which reference clock is being tracked.

A reference-clock error occurs when there is a problem with the clock driver or with the reference clock at the far end. If the clock controller detects a reference-clock error, the reference clocks are switched.

### Automatic clock recovery

A command for automatic clock recovery can be selected in Overlay 60 with the command EREF.

A DPRI loop is disabled when it enters a local-alarm condition. If the local alarm is cleared, the loop is enabled automatically. When the loop is enabled, clock tracking is restored in the following conditions:

**1** If the loop is assigned as the primary reference clock but the clock controller is tracking on the secondary reference or in free-run mode, it is restored to tracking on primary.

**2** If the loop is assigned as the secondary reference clock but the clock controller is in free-run mode, it is restored to tracking on secondary.

If the clock check indicates the switch is in free-run mode:

**1** Tracking is restored to the primary reference clock if defined.

**2** If the primary reference is disabled or in local alarm, tracking is restored to the secondary reference clock if defined.

***Note:*** If the switch was put into free-run mode intentionally by the craftsperson, it will resume tracking on a reference clock unless the clock-switching option has been disabled (LD 60, command MREF), or the reference clock has been "undefined" in the database.

### Automatic clock switching

If the EREF command is selected in Overlay 60, tracking on the primary or secondary reference clock is automatically switched in the following manner:

**1** If software is unable to track on the assigned primary reference clock, it switches to the secondary reference clock and sends appropriate DTC maintenance messages.

**2** If software is unable to track on the assigned secondary reference clock, it switches to free run.

### Clock configurations

The following Clock Controller configurations are possible:

- a single CPU System.
- a dual CPU System.

A single CPU system has one Clock Controller card. This card can receive references clocks from two sources referred to as the primary and secondary sources. These two sources can originate from a PRI, DTI etc. PRI cards such as the NT8D72BA are capable of supplying 2 references of the same clock source. These are known as Ref1 (available at J1) and Ref2 (available at J2) on the NT8D72BA.

The NTCK43 Dual PRI is capable of supplying two references from each clock source i.e. four references in total. The NTCK43 can thus supply Ref1 and Ref2 from its Primary and Ref1 and Ref2 from its Secondary.

There are two Clock Controller Cables, namely NTCK47 & NTCK81.

The following tables give full details of clocking options.

**Table 8**
**Clock Controller Options for the NTCK43 - Summary**

| CC Option | S2-1 | S2-2 | CPU Type | Cable | Notes |
|---|---|---|---|---|---|
| Option 1 | OFF | OFF | Single | NTCK47 | Ref from U0 on P2<br>Ref from U1 on P3 |
| Option 2 | OFF | ON | Dual | NTCK47 | Ref 1 from U0 on P2<br>Ref 2 from U0 on P3 |
| Opt ion 3 | ON | OFF | Dual | NTCK47 | Ref 1 from U1 on P2<br>Ref 2 from U1 on P3 |
| Option 4 | ON | ON | Dual | NTCK81 | Ref 1 from U0 on P2<br>Ref 2 from U0 on P3<br>Ref 1 from U1 on P4<br>Ref 2 from U1 on P5 |

**Table 9**
**Clock Controller Options for the NTCK43 - Descriptions (Part 1 of 2)**

| Clock Option | Notes |
|---|---|
| Option 1 | This option provides a single CPU system with 2 clock sources derived from the 2 units of the Dual PRI.<br>Connector P2 provides a clock source from Unit 0.<br>Connector P3 provides a clock source from Unit 1.<br>Refer to Figure 17. |
| Option 2 | This option provides a Dual CPU system with 2 references of a clock source derived from unit 0 of the DPRI.<br>Connector P2 provides a Ref 1 clock source from Unit 0.<br>Connector P3 provides a Ref 2 clock source from Unit 0.<br>Refer to Figure 18. |
| Option 3 | This option provides a Dual CPU system with 2 references of a clock source derived from unit 1 of the DPRI.<br>Connector P2 provides a Ref 1 clock source from Unit 1.<br>Connector P3 provides a Ref 2 clock source from Unit 1.<br>Refer to Figure 19. |

**Table 9**
**Clock Controller Options for the NTCK43 - Descriptions (Part 2 of 2)**

| Clock Option | Notes |
|---|---|
| Option 4 | This option provides a Dual CPU system with 2 references from each clock source derived from the DPRI.<br>Connector P2 provides a Ref 1 clock source from Unit 0.<br>Connector P3 provides a Ref 2 clock source from Unit 0.<br>Connector P4 provides a Ref 1 clock source from Unit 1.<br>Connector P5 provides a Ref 2 clock source from Unit 1.<br>Refer to Figure 20. |

Figures 17 to 20 illustrate the various clocking configurations available, as well as the Clock Controller cables and Clock switch options that support these configurations.

**Figure 17**
**CC Option 1**

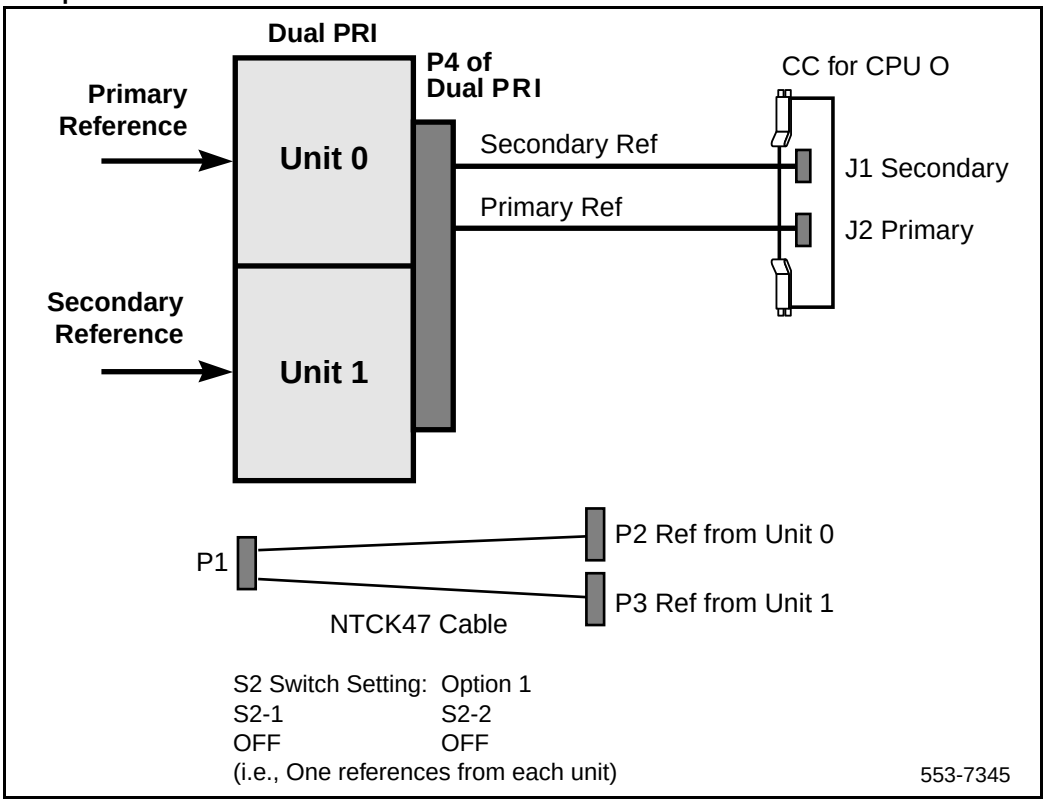

**Figure 18**
**CC Option 2**

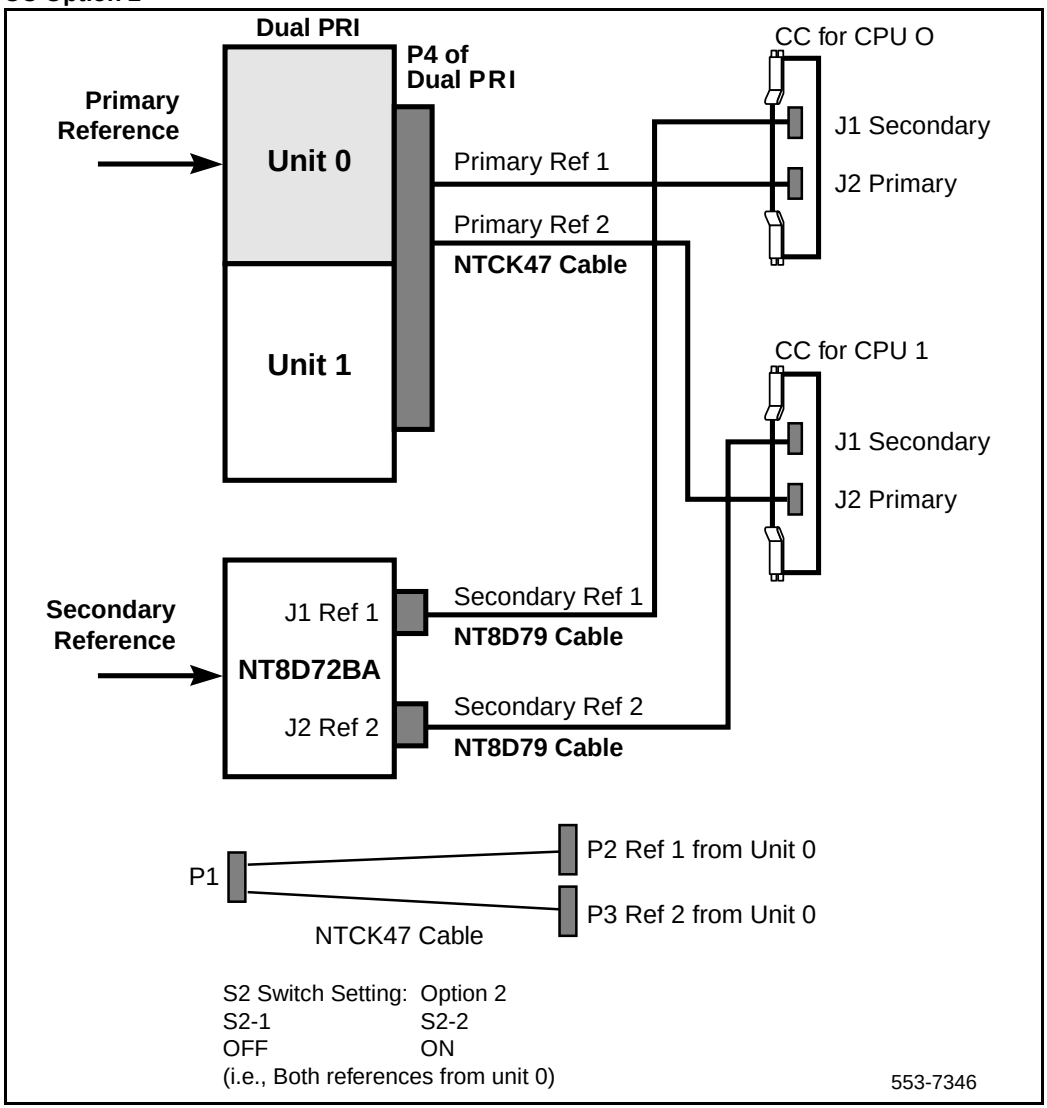

**Figure 19**
**CC Option 3**

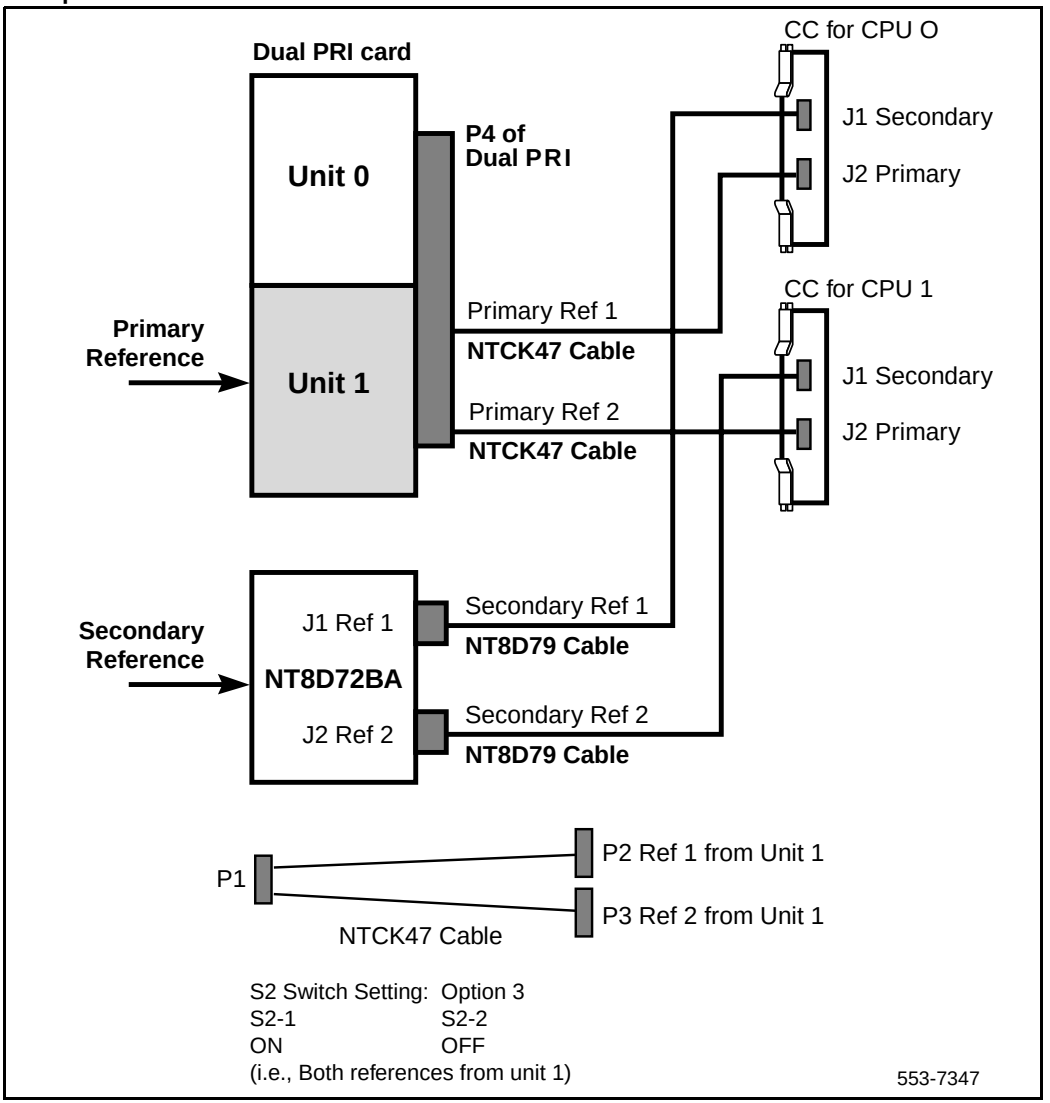

**Figure 20**
**CC Option 4**

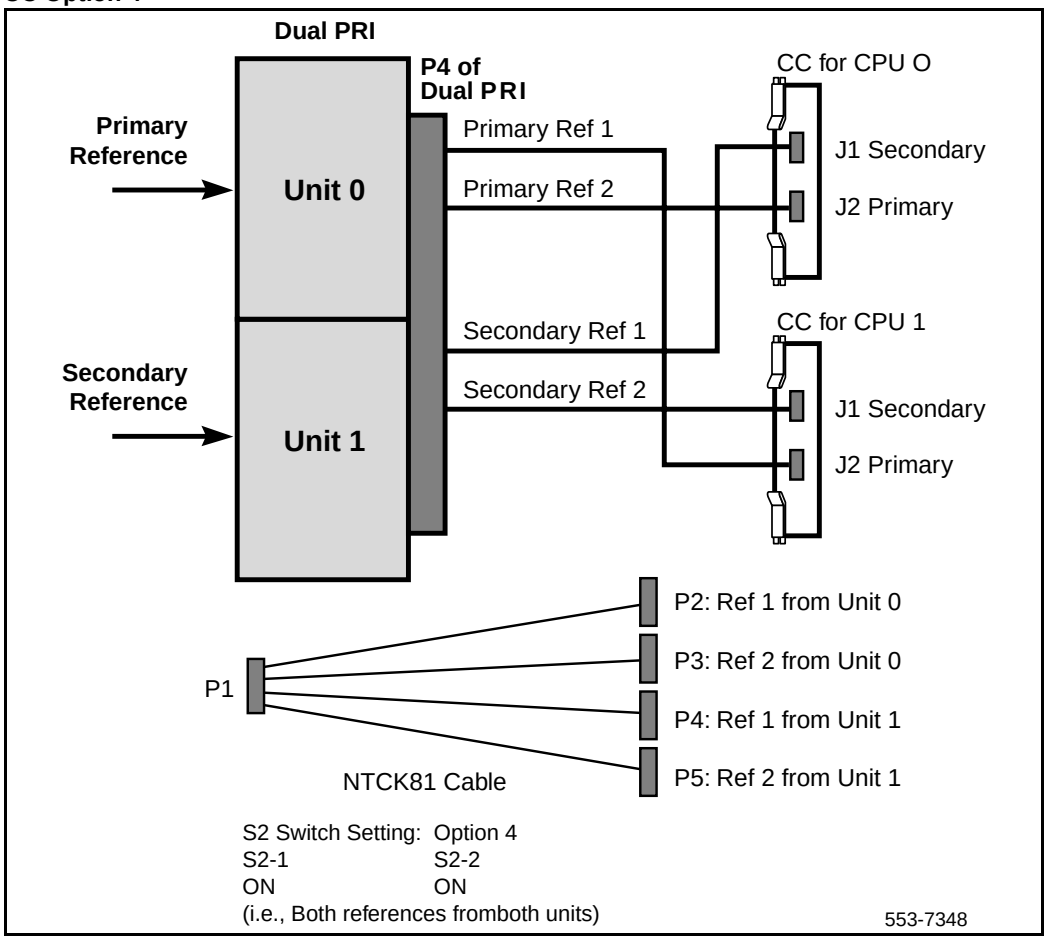

# NT5D97 Dual-port DTI2/PRI2 card

The NT5D97 is a dual-port 2.0 Mb DTI2/PRI2 card (the DDP2 firmware functions in DTI2 or PRI2 mode, depending on DIP switch settings) integrating the functionality of two QPC536E DTI2 cards or two NT8D72BA PRI2 cards, and one QPC414 ENET card, into a single CE card. The NT5D97 occupies a single slot in the Network shelf, providing two DTI2/PRI2 network connections, an interface to an external D-Channel Handler (the NT6D11AF) or the NT6D80 Multi-purpose Serial Data Link card, and an optional plug-on NTBK51AA Downloadable D-Channel daughterboard (DDCH) with two DCH interface ports.

The NT5D97 DDP2 card may be mixed in the same machine with earlier DTI2 (QPC536E) cards or PRI2 (NT8D72BA) cards, and the NTCK43 dual-port PRI2 (DPRI) card.

The NT5D97 DDP2 card hardware design uses a B57 ASIC E1/T1 framer. The carrier specifications comply with the ANSI TI.403 specification. The NT5D97 provides an interface to the 2.048 Mbps external digital line either directly or through an office repeater, Network Channel Terminating Equipment (NCTE), or Line Terminating Unit (LTU).

**DANGER OF ELECTRIC SHOCK**
The NT5D97 DDP2 card is not designed to be directly connected to the Public Switched Network, or other exposed plant networks. Such a connection should only be done using an isolating-type networking terminating device that provides voltage surge protection, such as a Line Terminating Unit (LTU), Network Channel Terminating Equipment (NCTE), or Network Termination 1 (NT1), as certified by your local, regional, or national safety agency and telecommunications authority.

## External D-Channel Interface (DCH or MSDL)

The connection between the DDP2 card and the external DCH or MSDL is via a 26 pin female D type connector. The data signals conform to the electrical characteristics of the EIA standard RS-422.

Two control signals are used to communicate the D-channel link status to the DCH or MSDL. These are:

- Receiver Ready (RR), originating at the DDP2 card, to indicate to the DCH or MSDL that the D-channel link is operational.
- Transmitter Ready (TR), originating at the DCH or MSDL, to indicate to the DDP2 card that the DCH or MSDL are ready to use the D-channel link.

Table 10 indicates how the RR control signal operates with regard to the DDP2 status.

**Table 10**
**DCH/MSDL Receiver Ready control signals**

| RR State | Condition |
|---|---|
| ON | D-Channel data rate selected at 64 Kbps<br>*and*<br>PRI2 loop is enabled<br>*and*<br>PRI2 link is not in OOS or Local Alarm mode state<br>*and*<br>PRI2 link is not transmitting a Remote Alarm pattern<br>*and*<br>PRI2 link is not receiving a Remote Alarm Indication from a remote facility |
| OFF | All other conditions |

## NT5D97 faceplate

Figure 21 illustrates the faceplate layout for the NT5D97 DDP card. The faceplate contains an enable/disable switch; a DDCH status LED; 6 x 2 trunk port status LEDs; and six external connectors. Table 11 shows the name of each connector, its designation with respect to the faceplate and the name and description of the card it is connected to. Also shown are the names of the LEDs.

**Figure 21**
**NT5D97AA faceplate**

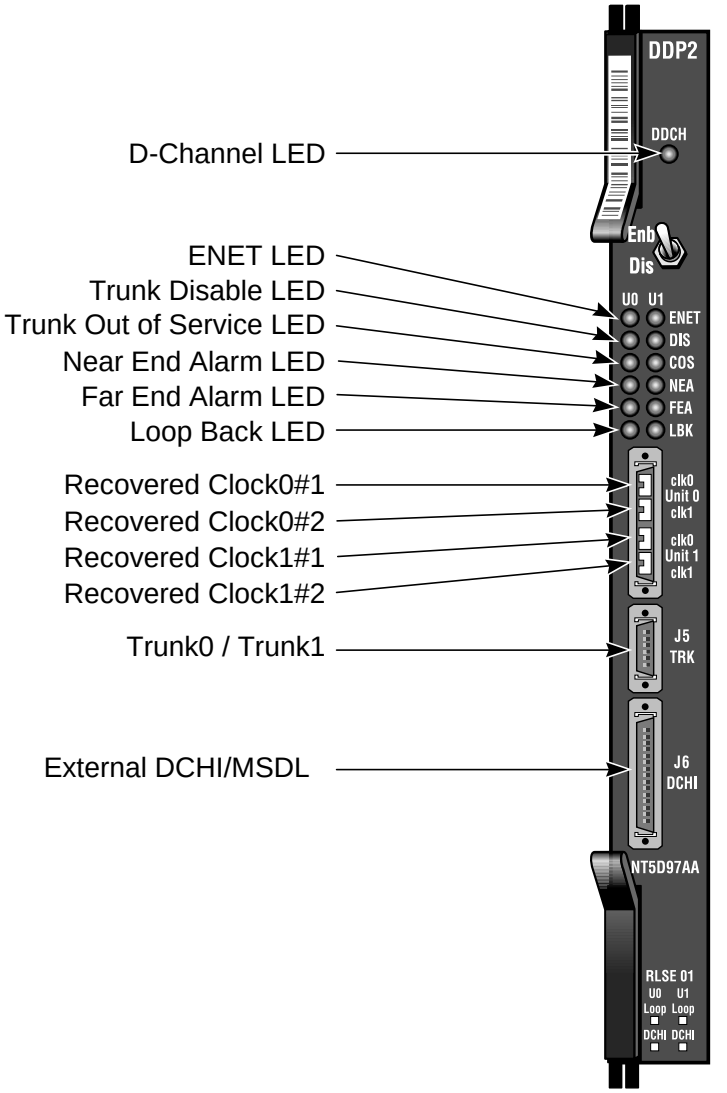


553-7380

**Table 11**
**External connectors and LEDs**

| Function | Faceplate Designator | Type | Description |
|---|---|---|---|
| Switch | ENB/DIS | Plastic, ESD protected | Card Enable/disable switch |
| Connectors | Unit 0 Clock 0 | RJ11 Connector | Connects reference clock 0 to Clock Controller card 0 |
| | Unit 0 Clock 1 | RJ11 Connector | Connects reference clock 0 to Clock Controller card 1 |
| | Unit 1 Clock 0 | RJ11 Connector | Connects reference clock 1 to Clock Controller card 0 |
| | Unit 1 Clock 1 | RJ11 Connector | Connects reference clock 1 to Clock Controller card 1 |
| | J5 TRK | 9 Pin<br>Female D Connector | Two external E1 Trunk 0 and Trunk 1 |
| | J6 DCH | 26 Pin<br>Female D Connector | Connects to external DCH or MSDL |
| LEDs | ENET | 2 Red LEDs | ENET 0 or ENET 1 is disabled |
| | DIS | 2 Red LEDs | Trunk 0 or Trunk 1 is disabled |
| | OOS | 2 Yellow LEDs | Trunk is out of service |
| | NEA | 2 Yellow LEDs | Local (Near End) Alarm |
| | FEA | 2 Yellow LEDs | Far End Alarm |
| | LBK | 2 Yellow LEDs | Loop Back test being performed on Trunk 0 or Trunk 1 |
| | DCH | Bicolor Red/Green LED | NTBK51AA status |

The following is a brief description of each element on the faceplate.

### Enable/Disable Switch

This switch is used to disable the card prior to insertion or removal from the network shelf. While this switch is in disable position, the card will not respond to the Meridian 1 CPU.

### ENET LEDs

Two red LEDs which indicate if the “ENET0” and “ENET1” portions of the card are disabled. These LEDs are lit in the following cases:

- When the enable/disable switch is in disabled state (lit by hardware).
- After power-up, before the card is enabled.
- When the ENET port on the card is disabled by software.

### Trunk Disable (DIS) LEDs

Two red LEDs which indicate if the “trunk port 0” or “trunk port 1” portions of the card are disabled. These LEDs are lit in the following cases:

- Upon reception of the “disable loop” message from the software.
- After power-up.

### OOS LEDs

Two yellow LEDs which indicate if the “trunk port 0” and “trunk port 1” portions of the card are out of service.

### NEA LEDs

Two yellow LEDs which indicate if the near end detects absence of incoming signal or loss of synchronization in “trunk port 0” or “trunk port 1” respectively. The Near End Alarm causes a Far End Alarm signal to be transmitted to the far end.

### FEA LEDs

Two yellow LEDs which indicate if a Far End Alarm has been reported by the far end (usually in response to a Near End Alarm condition at the far end) on “trunk port 0” or “trunk port 1”.

### LBK LEDs

Two yellow LEDs which indicate if a remote loopback test is being performed on trunk port 0 or trunk port 1. The loopback indication is active when the digital trunk is in remote loopback mode. Normal call processing is inhibited during the remote loopback test.

### DCH LED

Dual color red/green LED which indicates that the on-board DDCH is present but disabled (red), or is present and enabled (green). If a DDCH is not configured on the DDP2 card, this lamp will not be lit.

### Unit 0 Clk Connectors

Two RJ11 connectors for connecting:

- Digital trunk unit 0 recovered clock to primary or secondary reference source on clock controller card 0.
- Digital trunk unit 0 recovered clock to primary or secondary reference source on clock controller card 1.

### Unit 1 Clk Connectors

Two RJ11 connectors for connecting:

- Digital trunk unit 1 recovered clock to primary or secondary reference source on clock controller card 0.
- Digital trunk unit 1 recovered clock to primary or secondary reference source on clock controller card 1.

### Connector J5 (TRK)

A 9 pin D-Type connector used to connect:

- Digital trunk unit 0 receive and transmit Tip / Ring pairs.
- Digital trunk unit 1 receive and transmit Tip / Ring pairs.

### Connector J6 (DCH)

A 26 pin D-type connector (identical to the one used on the NTCK43 dual-port PRI2 card), used to connect the DDP2 card to the external MSDL or D-channel handler.

## System capacity and performance

### Physical capacity

Each NT5D97 DDP2 card occupies one slot on the network shelf. Each card supports two digital trunk circuits and two network loops. The total number of DDP2 cards per system is limited by the number of network loops, physical capacity of the shelf, number of DTI2/PRI2 interfaces allowed by the software and the range of DCH addresses.

### D-Channel capacity

The software configuration for the NTBK51AA DDCH is similar to the MSDL. It is both physical and logical, and supports D-channel functionality only.

Meridian 1 has a total capacity of 16 addresses (Device Addresses or DNUM) that may be reserved for DCH card, MSDL card or DDCH card. One exception is DNUM 0 which is commonly assigned to the TTY terminal.

No two different D-Channel providers can share the same DNUM. Hence, the combined maximum number of DCH, MSDL and DDCH cards in the system is 16.

The DCH has one D-Channel unit, the DDCH has two D-Channel units, and the MSDL has up to four. Therefore the total number of D-Channel in a Meridian 1 is derived by the following formula:

Total_Num_DCH-Units = Num_DCHx1 + Num_DDCHx2 + Num_MSDLx4

Therefore, Total_Num_DCH-Units in any given system is between 0-63.

### CPU capacity

Using a NT5D97 DDP2 card instead of DTI2/PRI2 cards does not increase the load on the Meridian 1 CPU. The DDP2 replaces an ENET card and two DTI2/PRI2 cards. Emulating the ENET card and the overall CPU capacity is not impacted by using a DDP2 card instead of a DTI2/PRI2 card.

### Power requirements

Table 12 lists the power requirements for the NT5D97 DDP2 card.

**Table 12**
**NT5D97 DDP2 power requirements**

| Voltage | Source | Current | |
|---|---|---|---|
| | | DDP2 (without NTBK51AA) | DDP2 (with NTBK51AA) |
| +5V | Backplane | 3A | 3.8A |
| +12V | Backplane | 25mA | 75mA |
| -12V | Backplane | 25mA | 75mA |
| Total Power (Maximum) | | 15.6W | 20.8W |

## Testability and diagnostics

The DDP2 card supports testing and maintenance functions through the following procedures:

- Selftest upon power up or reset
- Signalling test performed in the Overlay 30
- Loopback tests, self tests, and continuity tests performed by Overlay 60 and Overlay 45
- The D-Channel (MSDL, DCH, DDCH) maintenance is supported by Overlay 96.

***Note:*** The MSDL selftest is not applicable to the NTBK51AA D-Channel daughterboard.

## Cable requirements

This section lists the types of cable used and the lengths required for internal and external NT5D97 DDP2 connections.

***Note:*** No additional cabling is required for nB+D configurations. Multiple DDP2 cards and the D-channel are associated through software in Overlay 17.

DDP2 cable assemblies include:

- E1 carrier cables
  - NTCK45AA (A0407956)
  - NT8D7217 (A0617192)
  - NTCK78AA (A0618294)
  - NTCK79AA (A0618296)
- DDP2 to QPC471/QPC775 Clock Controller Cables
  - NTCG03AA
  - NTCG03AB
  - NTCG03AC
  - NTCG03AD
- DDP2 to DCH cables
  - NTCK46AA
  - NTCK46AB
  - NTCK46AC
  - NTCK46AD
- DDP2 to MSDL cables
  - NTCK80AA
  - NTCK80AB
  - NTCK80AC
  - NTCK80AD

A detailed discussion of each type of DDP2 cable follows.

## E1 carrier cables

### *NTCK45AA (A0407956)*

The NTCK45AA (8 ft.) is an 120Ω cable for Meridian 1 systems equipped with an I/O filter panel, connecting the TRK port (P1, D-type 9 pin male) on the DDP2 faceplate to the I/O filter (P2, P3 D-type 9 pin males).

**Figure 22**
**NTCK45AA**

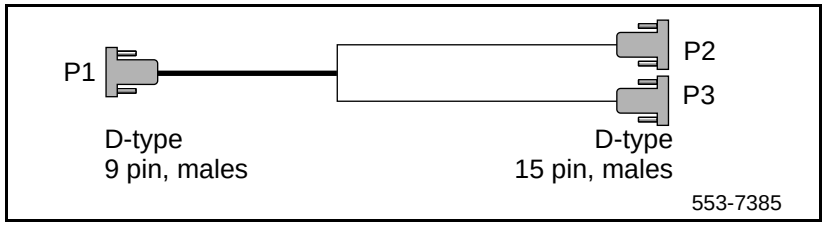


Table 13 which follows lists the pin attributes for the NTCK45AA cable.

**Table 13**
**NTCK45AA cable pins (Part 1 of 2)**

| Cable | Name | Description | Color | DDP2 pins | I/O Panel pins |
|---|---|---|---|---|---|
| 0 | T-PRI0TX | Trunk 0 Transmit Tip | Black | P1-1 | P2-6 |
| 0 | R-PRI0TX | Trunk 0 Transmit Ring | Red | P2-2 | P2-7 |
| 0 | T-PRI0RX | Trunk 0 Receive Tip | Black | P1-3 | P2-2 |
| 0 | R-PRI0RX | Trunk 0 Receive Ring | White | P1-4 | P2-3 |
| 0 | | GND Shield Wire | Bare | N/C | Case P2 |
| 0 | | GND Shield Wire | Bare | N/C | Case P2 |

**Table 13**
**NTCK45AA cable pins (Part 2 of 2)**

| Cable | Name | Description | Color | DDP2 pins | I/O Panel pins |
|---|---|---|---|---|---|
| 0 | | Standard Wire (3”) | Bare | Case P2 | P2-5 |
| 0 | | Standard Wire (3”) | Bare | Case P2 | P2-9 |
| 1 | T-PRI1TX | Trunk 1 Transmit Tip | Black | P1-5 | P3-6 |
| 1 | R-PRI1TX | Trunk 1 Transmit Ring | Red | P1-6 | P3-7 |
| 1 | T-PRI1RX | Trunk 1 Receive Tip | Black | P1-7 | P3-2 |
| 1 | R-PRI1RX | Trunk 1 Receive Ring | White | P1-8 | P3-3 |
| 1 | | GND Shield Wire | Bare | N/C | Case P3 |
| 1 | | GND Shield Wire | Bare | N/C | Case P3 |
| 1 | | Standard Wire (3”) | Bare | Case P3 | P3-5 |
| 1 | | Standard Wire (3”) | Bare | Case P3 | P3-9 |

### *NT8D7217 (A0617192)*

The NT8D7217 (50 ft.) is an 120Ω cable for Meridian 1 systems equipped with an I/O filter panel, connecting the 9 pin I/O filter connector to the 9 pin NCTE connector.

**Figure 23**
**NT8D7217**

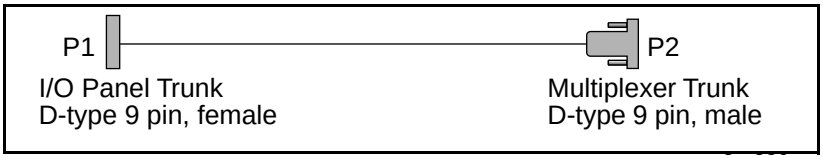


Table 14 which follows lists the pin attributes for the NT8D7217 cable.

**Table 14**
**NT8D7217 cable pins**

| Cable | Name | Description | Color | DDP2 pins | I/O Panel pins |
|---|---|---|---|---|---|
| 0 | T-PRI0TX | Trunk 0 Transmit Tip | Black | P1-6 | P2-6 |
| 0 | R-PRI0TX | Trunk 0 Transmit Ring | White | P1-7 | P2-7 |
| 0 | T-PRI0RX | Trunk 0 Receive Tip | Black | P1-2 | P2-2 |
| 0 | R-PRI0RX | Trunk 0 Receive Ring | Red | P1-3 | P2-3 |
| 0 | | GND Shield Wire | Bare | P1-5 | N/C |
| 0 | | GND Shield Wire | Bare | P1-9 | N/C |
| 1 | T-PRI1TX | Trunk 1 Transmit Tip | Black | P1-6 | P2-6 |
| 1 | R-PRI1TX | Trunk 1 Transmit Ring | White | P1-7 | P2-7 |
| 1 | T-PRI1RX | Trunk 1 Receive Tip | Black | P1-2 | P2-2 |
| 1 | R-PRI1RX | Trunk 1 Receive Ring | Red | P1-3 | P2-3 |
| 1 | | GND Shield Wire | Bare | P1-5 | N/C |
| 1 | | GND Shield Wire | Bare | P1-9 | N/C |

### *NTCK78AA (A0618294)*

The NTCK78AA (50 ft.) is an 120Ω cable for connecting the TRK port on the DDP2 faceplate (P1, D-type 9 pin male) to the Main Distribution Frame (MDF) (P2, P3 D-type 15 pin males). The NTCK78AA is used for Meridian 1 systems not equipped with an I/O filter panel.

**Figure 24**
**NTCK78AA**

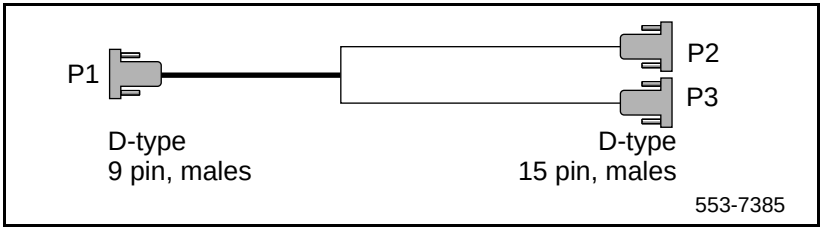


Table 15 which follows lists the pin attributes for the NTCK78AA cable.

**Table 15**
**NTCK78AA cable pins**

| Cable | Name | Description | Color | DDP2 pins | NCTE pins |
|---|---|---|---|---|---|
| 0 | T-PRI0TX | Trunk 0 Transmit Tip | Black | P1-1 | P2-1 |
| 0 | R-PRI0TX | Trunk 0 Transmit Ring | Red | P1-2 | P2-9 |
| 0 | T-PRI0RX | Trunk 0 Receive Tip | Black | P1-3 | P2-3 |
| 0 | R-PRI0RX | Trunk 0 Receive Ring | White | P1-4 | P2-11 |
| 0 | | GND Shield Wire | Bare | P1 Case | P2-2 |
| 0 | | GND Shield Wire | Bare | P1 Case | P2-4 |
| 1 | T-PRI1TX | Trunk 1 Transmit Tip | Black | P1-5 | P3-1 |
| 1 | R-PRI1TX | Trunk 1 Transmit Ring | Red | P1-6 | P3-9 |
| 1 | T-PRI1RX | Trunk 1 Receive Tip | Black | P1-7 | P3-3 |
| 1 | R-PRI1RX | Trunk 1 Receive Ring | White | P1-8 | P3-11 |
| 1 | | GND Shield Wire | Bare | P1 Case | P3-2 |
| 1 | | GND Shield Wire | Bare | P1 Case | P3-4 |

### *NTCK79AA (A0618296)*

The NTCK79AA (40 ft) is a 75Ω coaxial cable for connecting the TRK port on the DDP2 faceplate (P1, D-type 9 pin male) to the Line Terminating Unit (LTU) (P2, P3, P4, P5 BNC males).

**Figure 25**
**NTCK79AA**

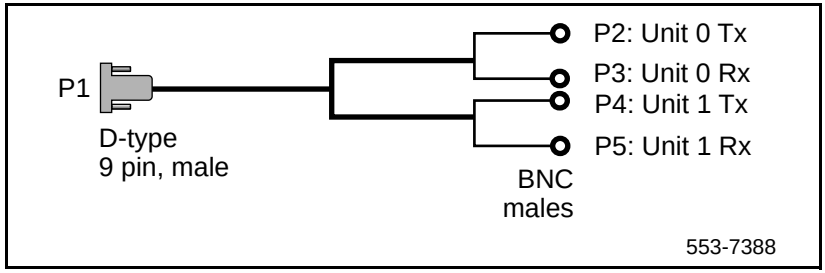


Table 16 which follows lists the pin attributes for the NTCK79AA cable.

**Table 16**
**NTCK79AA cable pins (Part 1 of 2)**

| Cable | Name | Description | Color | DDP2 pins | NCTE pins |
|---|---|---|---|---|---|
| 0 | T-PRI0TX | Trunk 0 Transmit Tip | Red | P1-1 | P2 inner conductor |
| 0 | R-PRI0TX | Trunk 0 Transmit Ring | Red | P1-2 | P2 shield |
| 0 | T-PRI0RX | Trunk 0 Receive Tip | Green | P1-3 | P3 inner conductor |
| 0 | R-PRI0RX | Trunk 0 Receive Ring | Green | P1-4 | P3 shield |
| 1 | T-PRI1TX | Trunk 1 Transmit Tip | Red | P1-5 | P4 inner conductor |
| 1 | R-PRI1TX | Trunk 1 Transmit Ring | Red | P1-6 | P4 shield |
| 1 | T-PRI1RX | Trunk 1 Transmit Tip | Green | P1-7 | P5 inner conductor |
| 1 | R-PRI1RX | Trunk 1 Receive Ring | Green | P1-8 | P5 shield |

**Table 16**
**NTCK79AA cable pins (Part 2 of 2)**

| Cable | Name | Description | Color | DDP2 pins | NCTE pins |
|---|---|---|---|---|---|
| 1 | | Outer metalized PVC shield | Bare | N/C | P1 Case |
| 1 | | 3 stranded wire | Bare | N/C | P1 Case |

### Reference clock cables

The NTCG03AA (14 ft), NTCG03AB (2.8 ft), NTCG03AC (4.0 ft), or NTCG03AD (7 ft), is a DDP2 card to Clock Controller cable, connecting each of the CLK0 or CLK1 ports on the DDP2 faceplate to the primary or secondary source ports on Clock Controller card 0 or 1.

**Figure 26**
**NTCG03AA/AB/AC/AD**

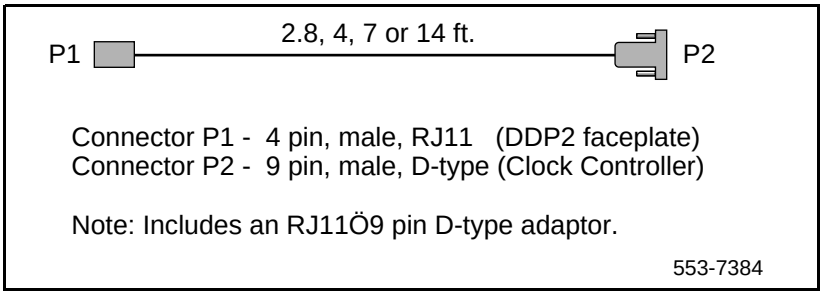


### MSDL/DCH cables

#### *External DCH cable*

The NTCK46 cable connects the DDP2 card to the NT6D11AF/NT5K75AA/NT5K35AA D-Channel Handler card. The cable is available in four different sizes:

- NTCK46AA (6 ft.) - DDP2 to DCH cable
- NTCK46AB (18 ft.) - DDP2 to DCH cable
- NTCK46AC (35 ft.) - DDP2 to DCH cable
- NTCK46AD (50 ft.) - DDP2 to DCH cable

**Figure 27**
**NTCK46AA/AB/AC/AD**

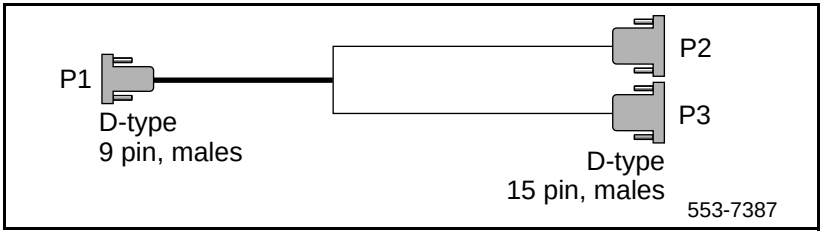


### External MSDL cable

The NTCK80 cable connects the DDP2 card to the NT6D80 MSDL card. The cable is available in four different sizes:

- NTCK80AA (6 ft) - DDP2 to MSDL cable
- NTCK80AB (18 ft) - DDP2 to MSDL cable
- NTCK80AC (35 ft) - DDP2 to MSDL cable
- NTCK80AD (50 ft) - DDP2 to MSDL cable

**Figure 28**
**NTCK80AA/AB/AC/AD**

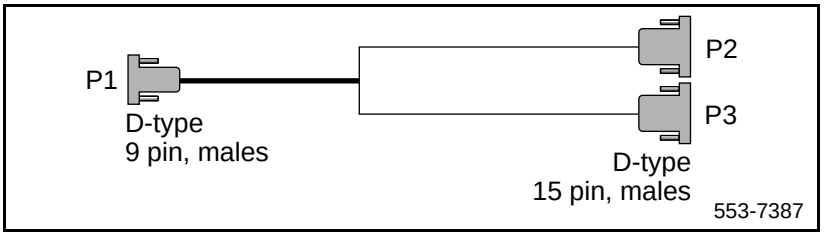


## Cable diagrams

Figure 29 on page 72 and Figure 30 on page 73 provide examples of typical cabling configurations for the DDP2.

Figure 29 shows a typical DDP2 cabling for a Meridian 1 system Option with an I/O panel, with the connection between the I/O panel and a Network Channel Terminating Equipment (NCTE).

Figure 30 shows cabling for a Meridian 1 system without an I/O panel. Here, the DDP2 faceplate is cabled directly to the NCTE.

***Note:*** Since there exists several clock cabling options, none has been represented in the diagrams. Please refer to “Clock configurations” on page 77 for a description on each available option.

**Figure 29**
**DDP2 cable for Meridian 1 systems with an I/O panel**

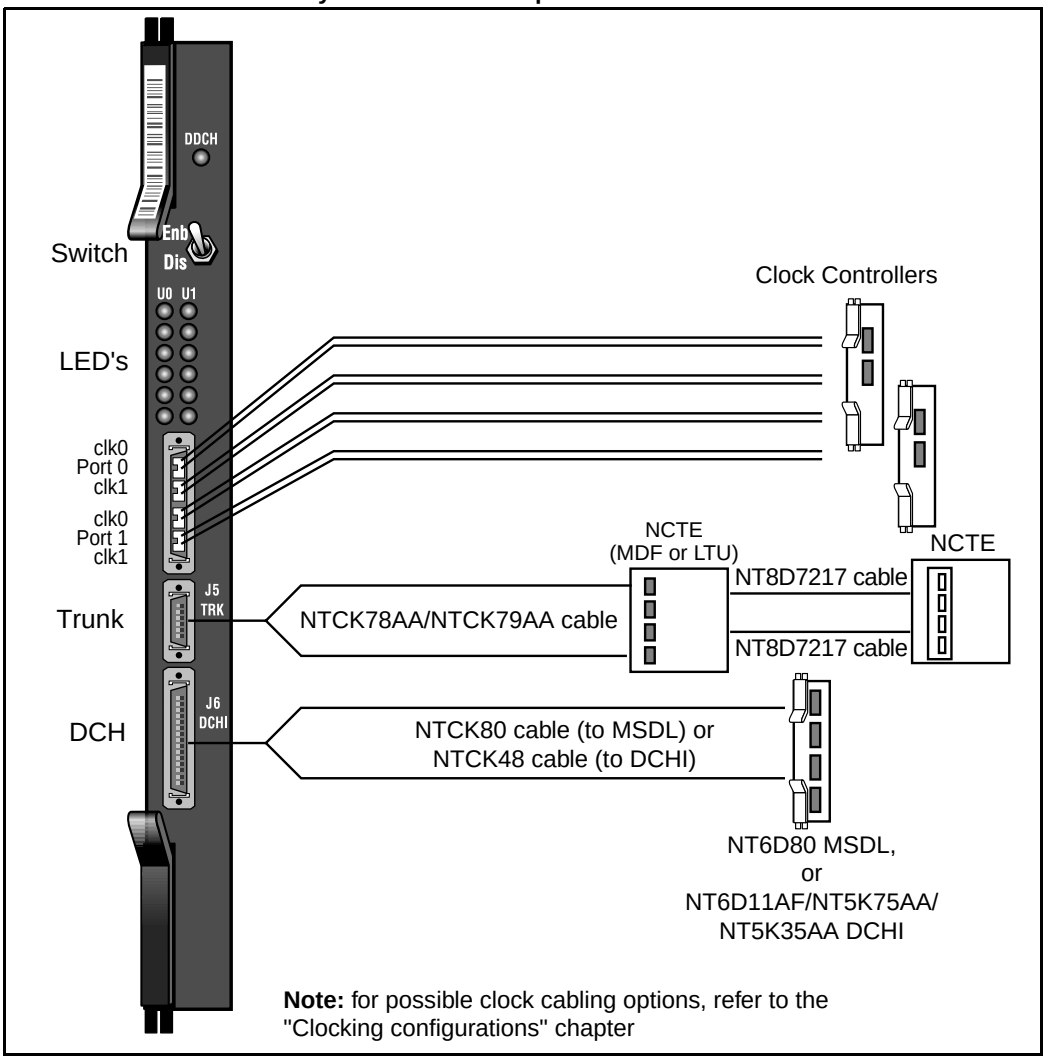

**Figure 30**
**DDP2 cable for Meridian 1 systems without an I/O panel**

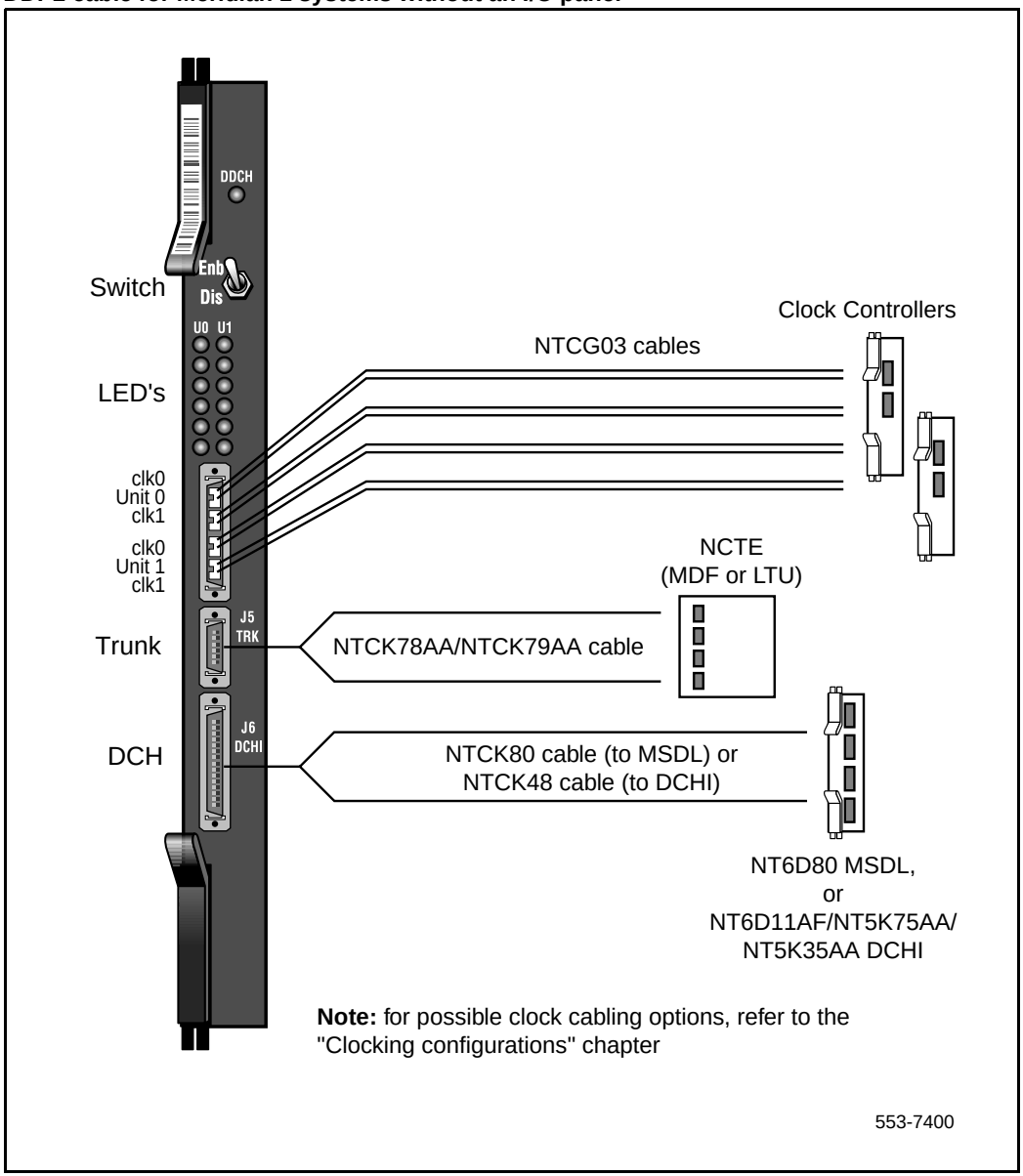

# Clock for the NT5D97

## Clock operation

There are two types of clock operation - tracking mode and free-run mode.

### *Tracking mode*

In tracking mode, the DDP2 loop supplies an external clock reference to a clock controller. Two DDP2 loops can operate in tracking mode, with one defined as the primary reference source for clock synchronization, the other defined as the secondary reference source. The secondary reference acts as a back-up to the primary reference.

As shown in Figure 31, a Meridian 1 system with dual CPUs may have two clock controllers (CC-0 and CC-1). One clock controller acts as a back-up to the other. The clock controllers should be completely locked to the reference clock.

**Figure 31**
**Clock Controller primary and secondary tracking**

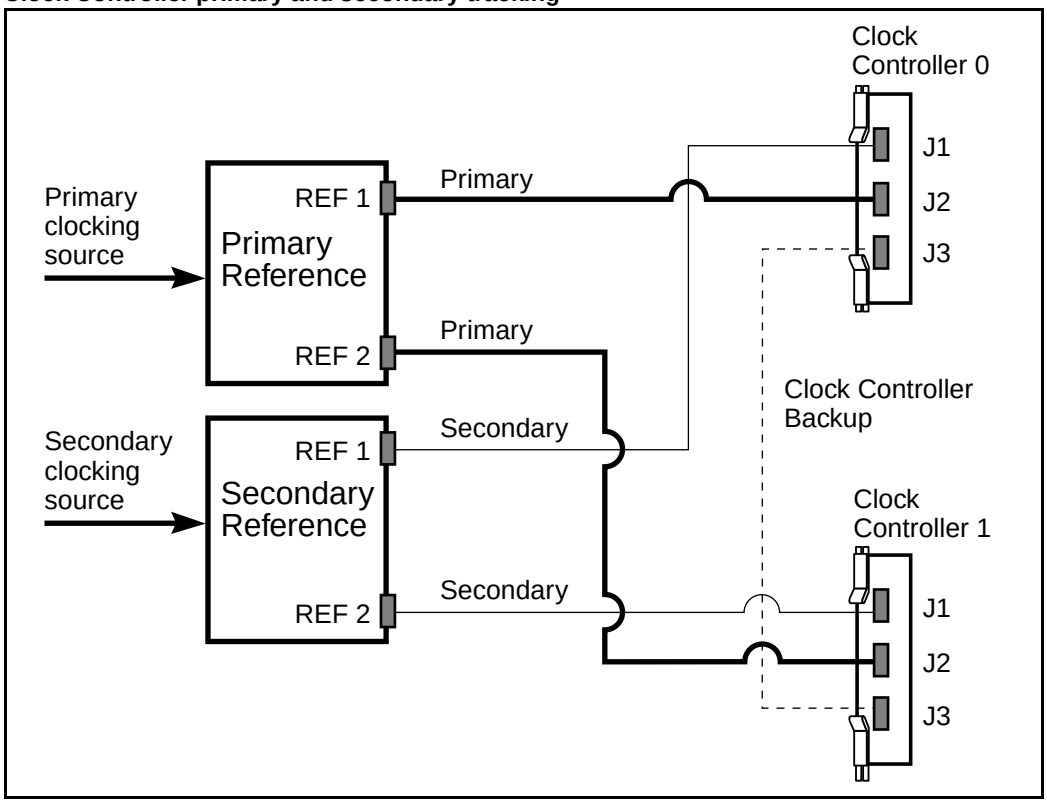


### *Free run (non-tracking) mode*

The clock synchronization of the Meridian 1 may operate in free-run mode if:

- no loop is defined as the primary or secondary clock reference,
- the primary and secondary references are disabled, or
- the primary and secondary references are in local (near end) alarm

### Reference clock errors

Meridian 1 software checks at intervals of 1 to 15 minutes to see if a clock controller or reference-clock error has occurred. (The interval of this check can be configured in Overlay 73).

In tracking mode, at any one time, there is one active clock controller which is tracking on one reference clock. If a clock controller error is detected, the Meridian 1 system switches to the back-up clock controller, without affecting which reference clock is being tracked.

A reference-clock error occurs when there is a problem with the clock driver or with the reference clock at the far end. If the clock controller detects a reference-clock error, the reference clocks are switched.

### Automatic clock recovery

A command for automatic clock recovery can be selected in Overlay 60 with the command EREF.

A DDP2 loop is disabled when it enters a local-alarm condition. If the local alarm is cleared, the loop is enabled automatically. When the loop is enabled, clock tracking is restored in the following conditions:

- If the loop is assigned as the primary reference clock but the clock controller is tracking on the secondary reference or in free-run mode, it is restored to tracking on primary.
- If the loop is assigned as the secondary reference clock but the clock controller is in free-run mode, it is restored to tracking on secondary.
- If the clock check indicates the switch is in free-run mode:
  - Tracking is restored to the primary reference clock if defined.
  - If the primary reference is disabled or in local alarm, tracking is restored to the secondary reference clock if defined.

  ***Note:*** If the Meridian 1 was put into free-run mode intentionally by the craftsperson, it will resume tracking on a reference clock unless the clock-switching option has been disabled (LD 60, command MREF), or the reference clock has been “undefined” in the database.

### Automatic clock switching

If the EREF command is selected in Overlay 60, tracking on the primary or secondary reference clock is automatically switched in the following manner:

- If software is unable to track on the assigned primary reference clock, it switches to the secondary reference clock and sends appropriate DTC maintenance messages.

- If software is unable to track on the assigned secondary reference clock, it switches to free run.

### Clock configurations

Clock Controllers may be used in a single CPU system or a dual CPU system.

A single CPU system has one Clock Controller card. This card can receive reference clocks from two sources referred to as the primary and secondary sources. These two sources can originate from a PRI2, DTI2, etc. PRI2 cards such as the NT8D72BA are capable of supplying two references of the same clock source. These are known as Ref1 (available at J1) and Ref2 (available at J2) on the NT8D72BA.

The NT5D97 card is capable of supplying two references from each clock source, i.e., four references in total. NT5D97 can supply Clk0 and Clk1 from Unit 0 and Clk0 and Clk1 from Unit 1. Either Unit 0 or Unit 1 can originate primary source, as shown in Figure 32 through Figure 35.

There is one Clock Controller cable required for the DDP2 card, which is available in four sizes; this is the NTCG03AA/AB/AC/AD. Refer to “Reference clock cables” on page 70 for more information.

Table 17 summarizes the clocking options. Table 18 explains the options in more detail.

**Table 17**
**Clock Controller options - summary**

| CC Option | CPU Type | Notes |
|---|---|---|
| Option 1 | Single | Ref from P0 on Clk0<br>Ref from P1 on Clk0 |
| Option 2 | Dual | Ref from P0 on Clk0<br>Ref from P0 on Clk1 |
| Option 3 | Dual | Ref from P1 on Clk0<br>Ref from P1 on Clk1 |
| Option 4 | Dual | Ref from P0 on Clk0<br>Ref from P0 on Clk1<br>Ref from P1 on Clk0<br>Ref from P1 on Clk1 |

**Table 18**
**Clock Controller options - description (Part 1 of 2)**

| Clock Option | Notes |
|---|---|
| Option 1 | This option provides a single CPU system with 2 clock sources derived from the 2 ports of the DDP2.<br>Connector Clk0 provides a clock source from Unit 0.<br>Connector Clk0 provides a clock source from Unit 1.<br>Refer to Figure 32. |
| Option 2 | This option provides a Dual CPU system with 2 references of a clock source derived from port 0 of the DDP2.<br>Connector Clk0 provides a Ref 1 clock source from Unit 0.<br>Connector Clk1 provides a Ref 2 clock source from Unit 0.<br>Refer to Figure 33. |

**Table 18**
**Clock Controller options - description (Part 2 of 2)**

| Clock Option | Notes |
|---|---|
| Option 3 | This option provides a Dual CPU system with 2 references of a clock source derived from port 1 of the DDP2.<br>Connector Clk0 provides a Ref 1 clock source from Unit 1.<br>Connector Clk1 provides a Ref 2 clock source from Unit 1.<br>Refer to Figure 34. |
| Option 4 | This option provides a Dual CPU system with 2 references from each clock source derived from the DDP2.<br>Connector Clk0 provides a Ref 1 clock source from Unit 0.<br>Connector Clk1 provides a Ref 2 clock source from Unit 0.<br>Connector Clk0 provides a Ref 1 clock source from Unit 1.<br>Connector Clk1 provides a Ref 2 clock source from Unit 1.<br>Refer to Figure 35. |

**Figure 32**
**Clock Controller – Option 1**

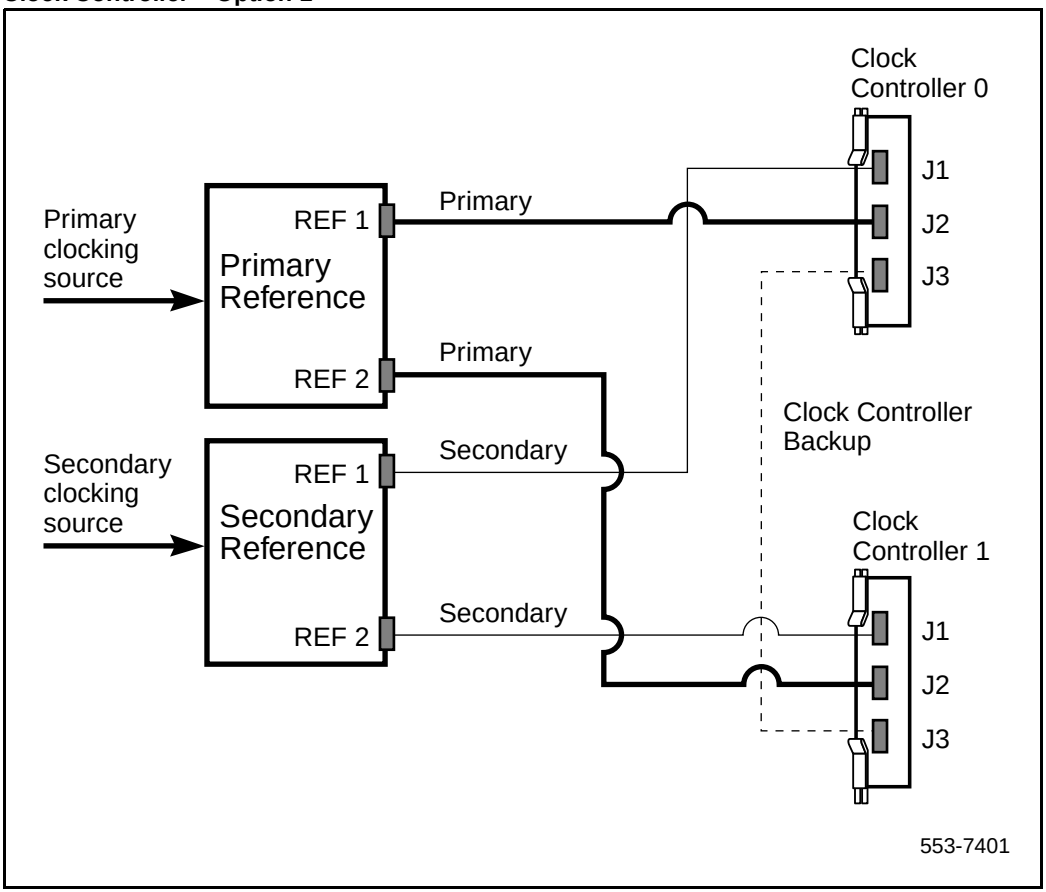

**Figure 33**
**Clock Controller – Option 2**

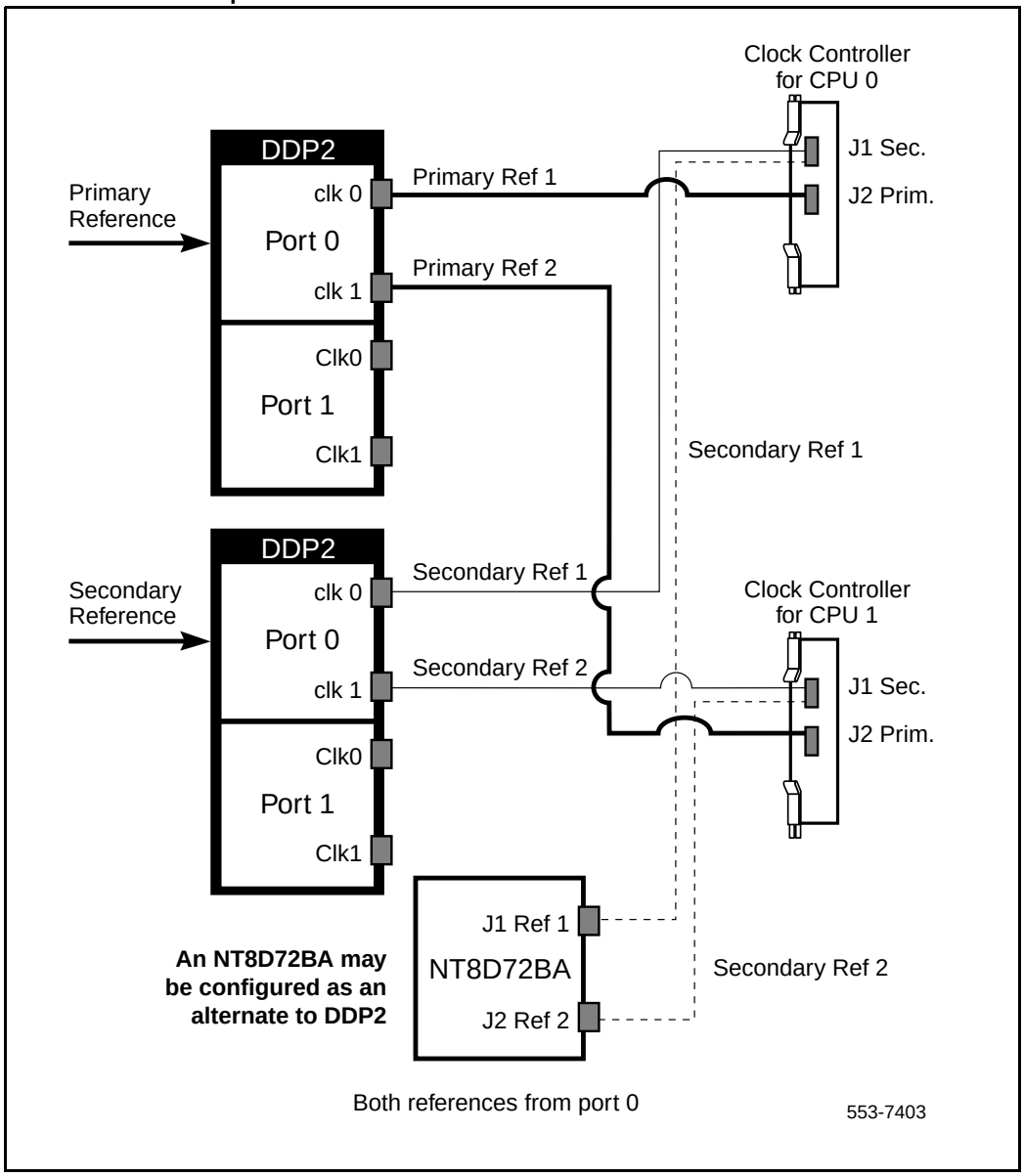

**Figure 34**
**Clock Controller – Option 3**

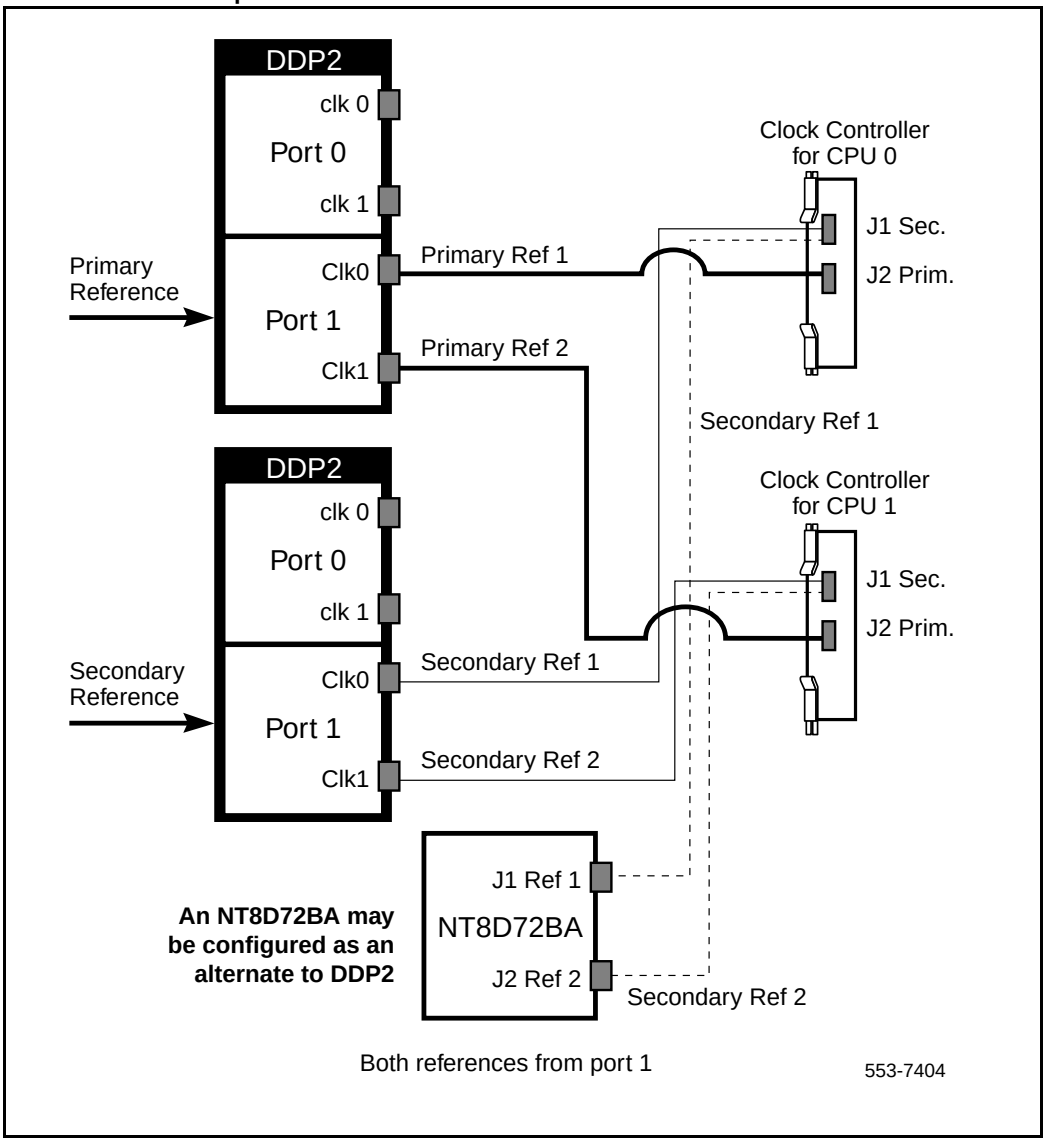

**Figure 35**
**Clock Controller – Option 4**

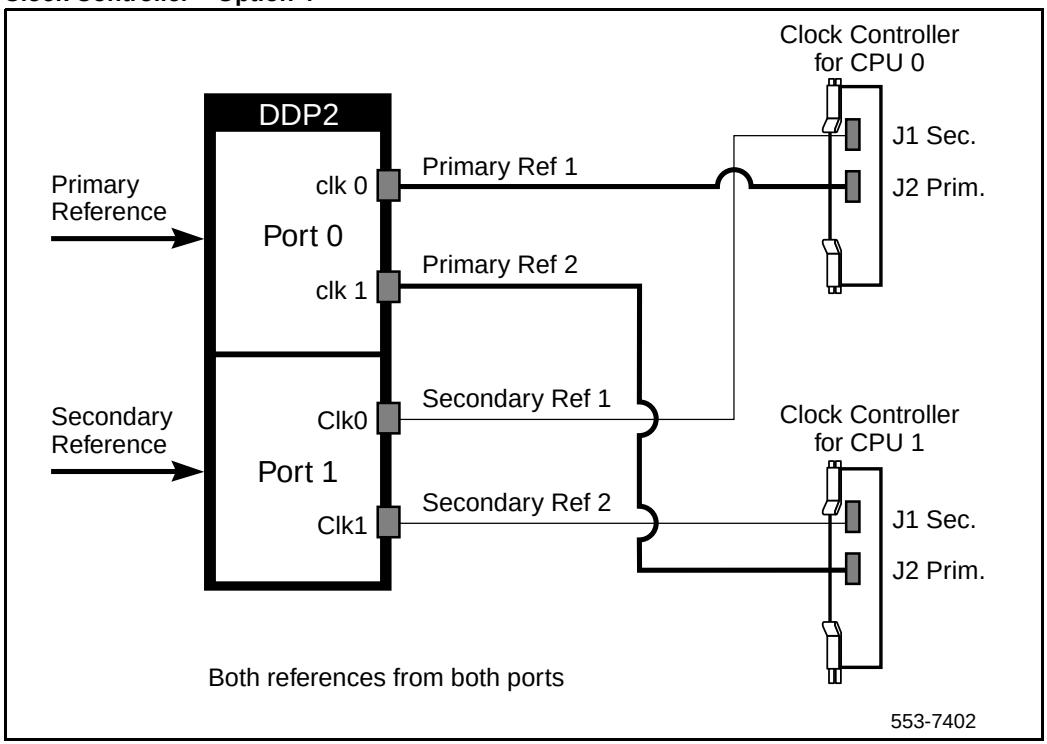


## NT5D12 Dual-port DTI/PRI

The NT5D12 is a dual-port 1.5 DTI/PRI card (the DDP firmware functions in DTI or PRI mode) integrating the functionality of two QPC472 DTI/QPC720 PRI cards and one QPC414 ENET into one card. The NT5D12 occupies a single Network shelf slot and provides two DTI/PRI network connections, an optional connection to an external D-Channel Handler, the QPC757 D-Channel Handler Interface (DCHI) or NT6D80 Multi-purpose Serial Data Link (MSDL), and an optional plug-on NTBK51AA Downloadable D-Channel daughterboard (DDCH.)

The NT5D12 DDP card supports all features (except the echo canceller and protocol conversion) of the QPC720. In addition, it maintains the backward compatibility of QPC720.

The NT5D12 DDP card hardware design uses a B57 ASIC E1/T1 framer. The carrier specifications comply with the ANSI TI.403 specification. The NT5D12 provides an interface to the 1.5 Mb external digital line either directly or through an office repeater, Line Terminating Unit (LTU), or Channel Service Unit (CSU).

## D-Channel and MSDL interface

The connection between the DDP card and the DCHI or MSDL is via a 26 pin female D type connector. The data signals conform to the electrical characteristics of the EIA standard RS-422.

Two control signals are used to communicate the D-Channel link status to the DCHI or MSDL. These are:

- Receiver Ready (RR), originating at the DDP card, to indicate to the DCHI or MSDL that the D-channel link is operational.
- Transmitter Ready (TR), originating at the DCHI or MSDL, to indicate to the DDP card that the DCHI or MSDL are ready to use the D-Channel link.

Table 19 indicates how the RR control signal operates with regard to the DDP status.

**Table 19**
**DCHI/MSDL Receiver Ready control signals**

| RR State | Condition |
|---|---|
| ON | D-Channel data rate selected at 64 Kbps or 56 Kbps or 64 Kbps inverted<br>*and*<br>PRI loop is enabled<br>*and*<br>PRI link is not in RED alarm mode state<br>*and*<br>PRI link is not transmitting a yellow alarm pattern<br>*and*<br>PRI link is not receiving a Remote Alarm Indication from the remote facility<br>*and*<br>PRI link is not in FA3 mode<br>*and*<br>Transmitter Ready (TR) control signal from the DCHI/MSDL is ON |
| OFF | All other conditions |

## NT5D12 faceplate

Figure 36 on page 86 and Figure 37 on page 87 illustrate the faceplate layout for the NT5D12 DDP card. The faceplate contains an enable/disable switch; a DDCH status LED; 6 x 2 trunk port status LEDs; and six external connectors. Table 11 shows the name of each connector, its designation with respect to the faceplate and the name and description of the card it is connected to. Also shown are the names of the LEDs.

**Figure 36**
**NT5D12 faceplate - general view**

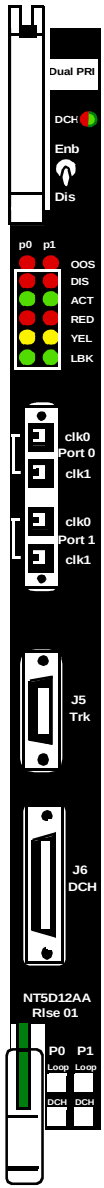

**Figure 37**
**DDP faceplate - detailed view**

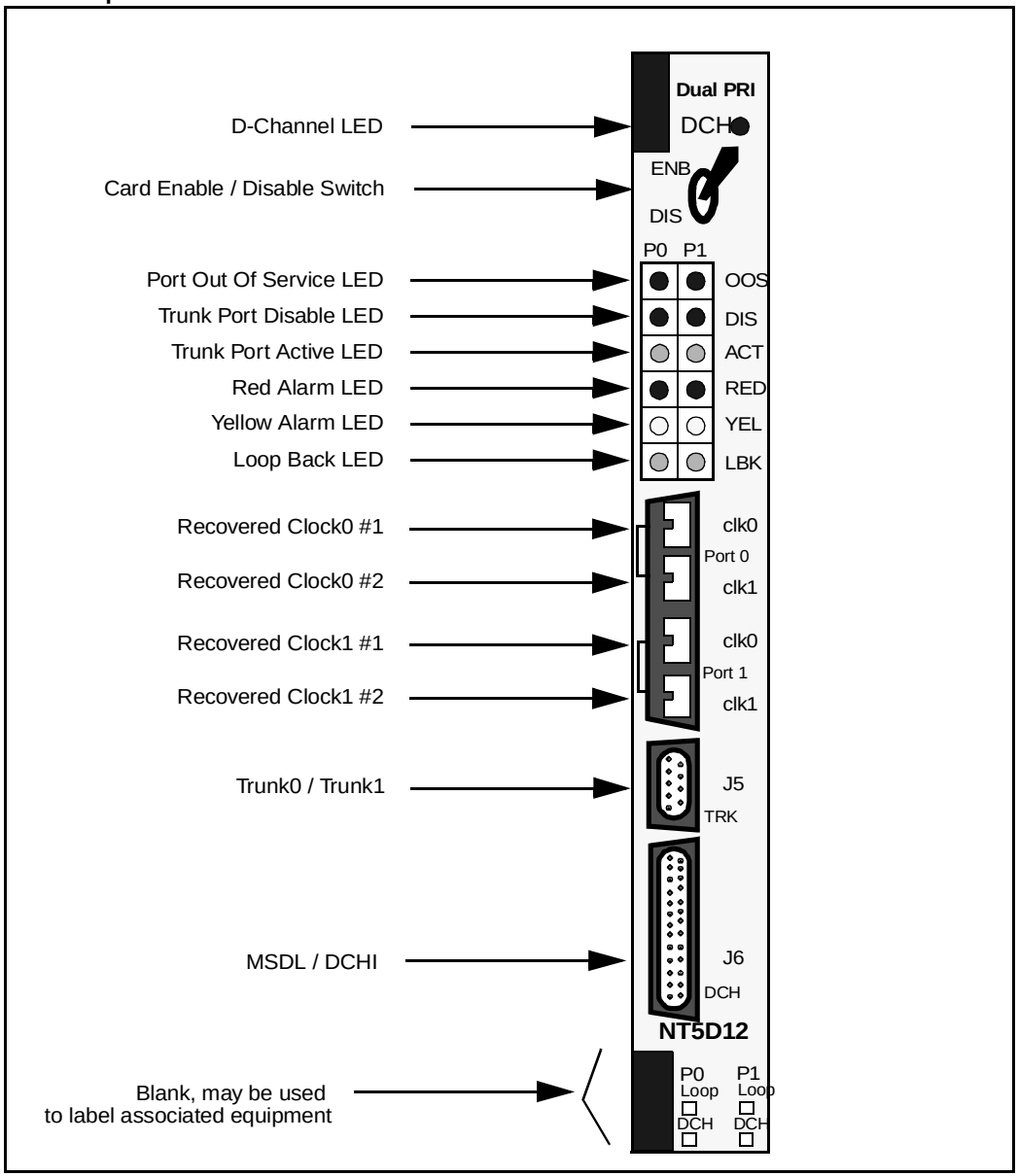

**Table 20**
**External connectors and LEDs**

| Function | Faceplate Designator | Type | Description |
|---|---|---|---|
| Switch | ENB/DIS | Plastic, ESD protected | Card Enable/disable switch |
| Connectors | Port 0 Clock 0 | RJ11 Connector | Connects reference clock to Clock Controller card |
| | Port 0 Clock 1 | RJ11 Connector | Connects reference clock to Clock Controller card |
| | Port 1 Clock 0 | RJ11 Connector | Connects reference clock to Clock Controller card |
| | Port 1 Clock 1 | RJ11 Connector | Connects reference clock to Clock Controller card |
| | J5 TRK | 9 Pin Female D Connector | Two external DS-1 Trunk 0 and Trunk 1 |
| | J6 DCH | 26 Pin Female D Connector | Connects to DCHI or MSDL |
| LEDs | OOS | 2 Red LEDs | ENET 0 or ENET 1 disabled |
| | DIS | 2 Red LEDs | Trunk 0 or Trunk 1 disabled |
| | ACT | 2 Green LEDs | Trunk 0 or Trunk 1 lines active |
| | RED | 2 Red LEDs | Red Alarm on Trunk 0 or Trunk 1 |
| | YEL | 2 Yellow LEDs | Yellow Alarm on Trunk 0 or Trunk 1 |
| | LBK | 2 Green LEDs | Loop Back test being performed on Trunk 0 or Trunk 1 |
| | DCH | Bicolor Red/Green LED | NTBK51AA status |

The following is a brief description of each element on the faceplate:

### Enable/Disable Switch

This switch is used to disable the card prior to insertion or removal from the network shelf; while this switch is in disable position, the card will not respond to Meridian-1 CPU.

### Port Out of Service LEDs

Two red LEDs which indicate if the “ENET0” and “ENET1” portion of the card are disabled. These LEDs are lit in the following cases:

- When the enable/disable switch is in state *disable* (lit by hardware)
- After power-up, before the card is enabled
- When the ENET port on the card is disabled by software.

### Trunk Port Disable LEDs

Two red LEDs indicate if the “trunk port 0” and “trunk port 1” portion of the card are disabled. These LEDs are turned on in the following cases:

- When the enable/disable switch is in state *disable* (lit by hardware).
- After power-up, before the card is enabled.
- When digital trunk interface on the card is deactivated by software.

### ACT LEDs

Two green LEDs indicate if the “trunk port 0” and “trunk port 1” portion of the card is active.

### RED LEDs

Two red LEDs indicate if the near end detects absence of incoming signal or loss of synchronization in “trunk port 0” or “trunk port 1” respectively. The Near End Alarm causes a Far End Alarm signal to be transmitted to the far end.

### YEL LEDs

Two yellow LEDs which indicate if a Far End Alarm has been reported by the far end (usually in response to a Near End Alarm condition at the far end) on “trunk port 0” or “trunk port 1”.

### LBK LEDs

Two green LEDs indicate the remote loopback test is being performed on trunk port 0 or trunk port 1. The loopback indication is active when the digital trunk is in remote loopback mode (T1 signals received from the far end are regenerated and transmitted to the far end.) Normal call processing is inhibited during remote loopback test.

### DCH LED

A dual color red/green LED indicates that the on-board DDCH is present but disabled (red), or is present and enabled (green). If a DDCH is not configured on the DDP card, this lamp will not be lit.

### Port 0 Clk Connectors

Two RJ11 connectors for connecting:

- Digital trunk port 0 recovered clock to primary or secondary reference source on clock controller card 0.
- Digital trunk port 0 recovered clock to primary or secondary reference source on clock controller card 1.

### Port 1 Clk Connectors

Two RJ11 connectors for connecting:

- Digital trunk port 1 recovered clock to primary or secondary reference source on clock controller card 0.
- Digital trunk port 1 recovered clock to primary or secondary reference source on clock controller card 1.

### Connector J5 (TRK)

A 9 pin D-Type connector used to connect:

- Digital trunk port 0 receive and transmit Tip / Ring pairs.
- Digital trunk port 1 receive and transmit Tip / Ring pairs.

### Connector J6 (DCH)

A 26 pin D-type connector, used to connect the DDP card to MSDL or QPC757 external D-channel handlers.

## System capacity and performance

### Physical capacity

Each DDP card occupies one slot on the network shelf. It supports two digital trunk circuits and two network loops. The total number of DDP cards per system is limited by the number of network loops, physical capacity of the shelf, number of DTI/PRI interfaces allowed by the software and the range of DCH addresses.

### D-Channel capacity

The software configuration for the NTBK51AA DDCH is similar to the MSDL. It is both physical and logical, and supports D-Channel functionality only.

Meridian 1 has a total capacity of 16 addresses (Device Addresses or DNUM) that may be reserved for DCHI card, MSDL card or DDCH card. One exception is DNUM 0 which is commonly assigned to the System Monitor.

No two different D-Channel providers can share the same DNUM. Hence, the combined maximum number of DCHI, MSDL and DDCH cards in the system is 16.

The DCHI and DDCH have two D-Channel units, the MSDL has four. Therefore the total number of D-Channels in a Meridian 1 is derived by the following formula:

Total_Num_DCH-Units = Num_DCHIx2 + Num_DDCHx2 + Num_MSDLx4

Therefore, Total_Num_DCH-Units in any given system is between 0-63.

### CPU capacity

Using a NT512 DDP card instead of DTI/PRI cards does not increase the load on the Meridian 1 CPU. The DDP replaces an ENET card and two DTI/PRI cards, it emulates the ENET card and the overall CPU capacity is not impacted by usage of DDP card instead of a DTI/PRI card.

## Power requirements

Table 21 lists the power requirements for the DDP card.

**Table 21**
**DDP power requirements**

| Voltage | Source | Current | |
|---|---|---|---|
| | | DDP (without NTBK51AA) | DDP (with NTBK51AA) |
| +5V | Backplane | 3A | 3.8A |
| +12V | Backplane | 25mA | 75mA |
| -12V | Backplane | 25mA | 75mA |
| Total Power (Maximum) | | 15.6W | 20.8W |

## Testability and diagnostics

The DDP card supports all current QPC720 testing and maintenance functions through the following procedures:

- Selftest upon power up or reset;
- Signalling test performed in the Overlay 30;
- Loopback tests, self tests, and continuity tests performed by Overlay 60 and Overlay 45;
- The D-Channel (MSDL, DCHI, DDCH) maintenance is supported by Overlay 96.

## NT5D12 Cable requirements

This section lists the types of cable used and the lengths required for internal and external NT5D12 DDP connections.

***Note 1:*** No additional cabling is required for nB+D configurations. Multiple DDPs and the D-channel are associated through software in Overlay 17.

***Note 2:*** A detailed discussion of each type of DDP cable listed below will follow.

New DDP cable assemblies include:

- Meridian 1 Trunk Tip/Ring Cables
  - NT5D16AA
  - NT5D17AA
  - QCAD133
- DDP to QPC471/QPC775 Clock Controller Cables
  - NTCG03AA
  - NTCG03AB
  - NTCG03AC
  - NTCG03AD
- DDP to DCHI cables
  - NTCK46AA
  - NTCK46AB
  - NTCK46AC
  - NTCK46AD
- DDP to MSDL cables
  - NTCK80AA
  - NTCK80AB
  - NTCK80AC
  - NTCK80AD

## Trunk Tip/Ring cables

### NT5D16AA

The NT5D16AA (8 ft.) is a 100Ω cable for Meridian 1 systems equipped with an I/O filter panel, connecting the 9 pin D-type TRK port on the DDP faceplate to the I/O filter.

***Note:*** On the I/O panel side, this cable is equipped with a monitor bantam plug and a 15 pin D-type trunk connector mounted on a small PCB. There are no bantam plugs on the DDP faceplate.

**Figure 38**
**NT5D16AA**

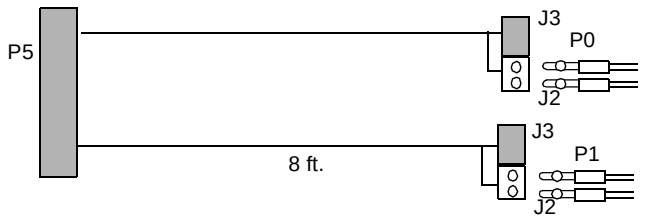


Connector P5 - 9-pin, male, D-type (J5 on the DDP faceplate)
Connector P0: J2 - Monitor Bantam Plug, J3 - 15-pin, male, D-type
Connector P1; J2 - Monitor Bantam Plug, J3 - 15-pin, male D-type

*Note:*
This cable is only used in Meridian 1 systems equipped with I/O filter.

Table 22 which follows lists the pin attributes for the NT5D16AA cable.

**Table 22**
**NT5D16AA cable pins**

| Cable | Name | Description | Color | DDP pins (J5) | I/O Panel pins (J2, J3) |
|---|---|---|---|---|---|
| 0 | T-PRI0TX | Trunk 0 Transmit Tip | Black | J5-1 | P0J3-1<br>P0J2-3 |
| 0 | R-PRI0TX | Trunk 0 Transmit Ring | Red | J5-2 | P0J3-9<br>P0J2-9 |
| 0 | T-PRI0RX | Trunk 0 Receive Tip | Black | J5-3 | P0J3-3<br>P0J2-4 |
| 0 | R-PRI0RX | Trunk 0 Receive Ring | White | J5-4 | P0J3-11<br>P0J2-10 |
| 0 | | GND Shield Wire | Bare | N/C | Case P0 |
| 0 | | GND Shield Wire | Bare | N/C | Case P0 |
| 1 | T-PRI1TX | Trunk 1 Transmit Tip | Black | J5-5 | P1J3-1<br>P1J2-3 |
| 1 | R-PRI1TX | Trunk 1 Transmit Ring | Red | J5-6 | P1J3-9<br>P1J2-9 |
| 1 | T-PRI1RX | Trunk 1 Receive Tip | Black | J5-7 | P1J3-3<br>P1J2-4 |
| 1 | R-PRI1RX | Trunk 1 Receive Ring | White | J5-8 | P1J3-11<br>P1J2-10 |
| 1 | | GND Shield Wire | Bare | N/C | Case P1 |
| 1 | | GND Shield Wire | Bare | N/C | Case P1 |

## Reference clock cables

The NTCG03AA (14 ft.), NTCG03AB (2.8 ft.), NTCG03AC (4.0 ft.), or NTCG03AD (7 ft.) is a DDP card to Clock Controller cable, connecting each of the CLK0 or CLK1 ports on the DDP faceplate to the primary or secondary source ports on Clock Controller card 0 or 1.

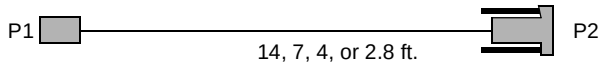


Connector P1 - 4 pin, male, RJ11 (DDP faceplate)
Connector P2 - 9 pin, male, D-type (Clock Controller)

*Note:*
Includes an RJ11<-->9 pin D-type adaptor.

## MSDL/DCHI cables

### External DCHI cable

The NTCK46 cable connects the DDP card to the QPC757 DCHI D-Channel Handler card. The cable is available in four different sizes:

- NTCK46AA (6 ft.) - DDP to DCHI cable
- NTCK46AB (18 ft.) - DDP to DCHI cable
- NTCK46AC (35 ft.) - DDP to DCHI cable
- NTCK46AD (50 ft.) - DDP to DCHI cable

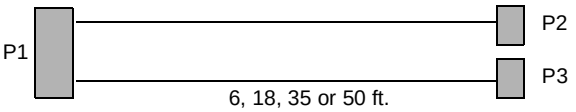


Connector P1 - 26 pin, male, D-type (DDP faceplate)
Connector P2 - 25 pin, male, D-type (DCHI port 0)
Connector P3 - 25 pin, male, D-type (DCHI port 1)

### External MSDL cable

The NTCK80 cable connects the DDP card to the NT6D80 MSDL card. The cable is available in four different sizes:

- NTCK80AA (6 ft.) - DDP to MSDL cable
- NTCK80AB (18 ft.) - DDP to MSDL cable

- NTCK80AC (35 ft.) - DDP to MSDL cable
- NTCK80AD (50 ft.) - DDP to MSDL cable

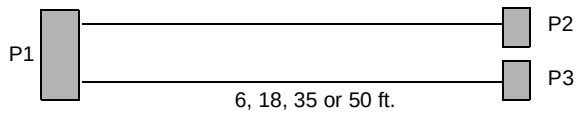


Connector P1 - 26 pin, male, D-type (DDP faceplate)
Connector P2 - 26 pin, SCSI (MSDL port 0)
Connector P3 - 26 pin, SCSI (MSDL port 1)

## Cable diagrams

Figure 39 provides an example of a typical cabling configuration for the DDP. Please note that these figures are representational only, and are not intended to show the relational card slot position of the various cards.

Figure 39 shows a typical DDP cabling for a Meridian 1 system Option with an I/O panel, with the connection between the I/O panel and a Network Channel Terminating Equipment (NCTE).

> ***Note:*** Since there exists several clock cabling options, none has been represented in the diagram. Please refer to “Clock configurations” on page 101 for a description on each available option.

**Figure 39**
**DDP cable for Meridian 1 systems with an I/O panel**

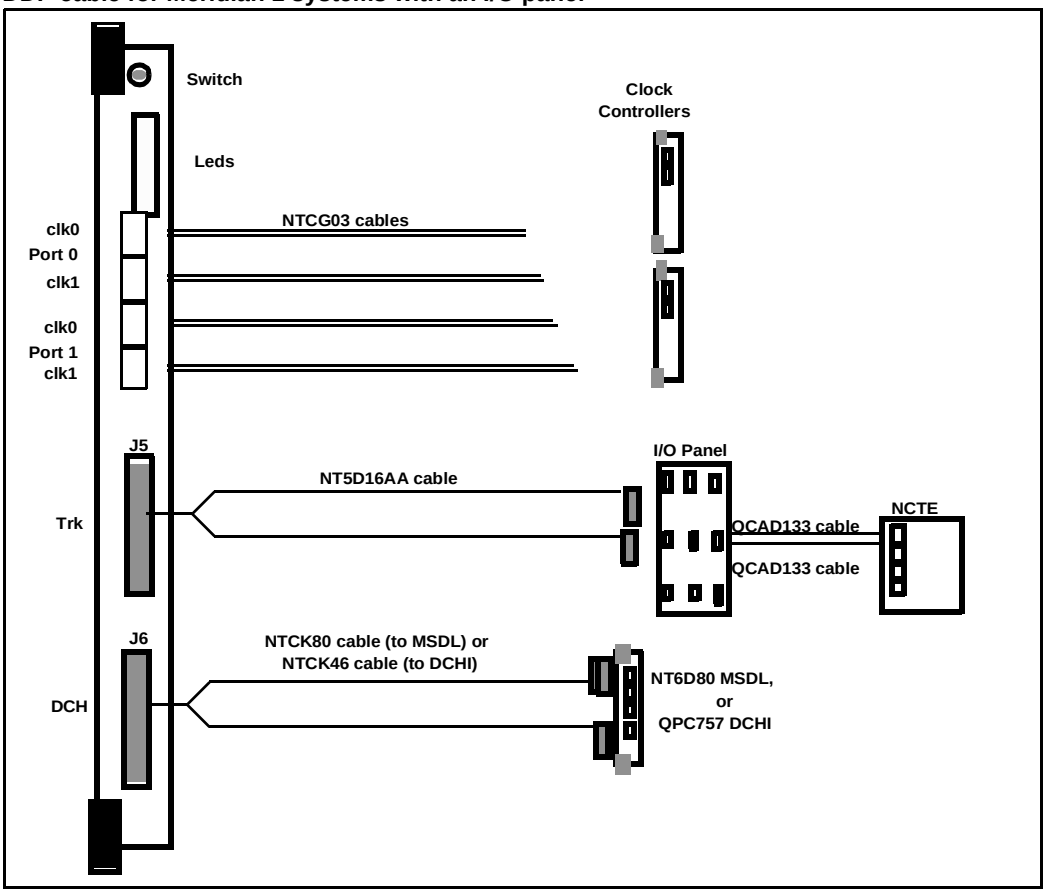


## Clock

There are two types of clock operation - tracking mode and free-run mode.

### Tracking mode

In tracking mode, the DDP loop supplies an external clock reference to a clock controller. Two DDP loops can operate in tracking mode, with one defined as the primary reference source for clock synchronization, the other defined as the secondary reference source. The secondary reference acts as a back-up to the primary reference.

As shown in Figure 40, a Meridian 1 system with dual CPUs may have two clock controllers (CC-0 and CC-1). One clock controller acts as a back-up to the other. The clock controllers should be completely locked to the reference clock.

**Figure 40**
**Clock Controller primary and secondary tracking**

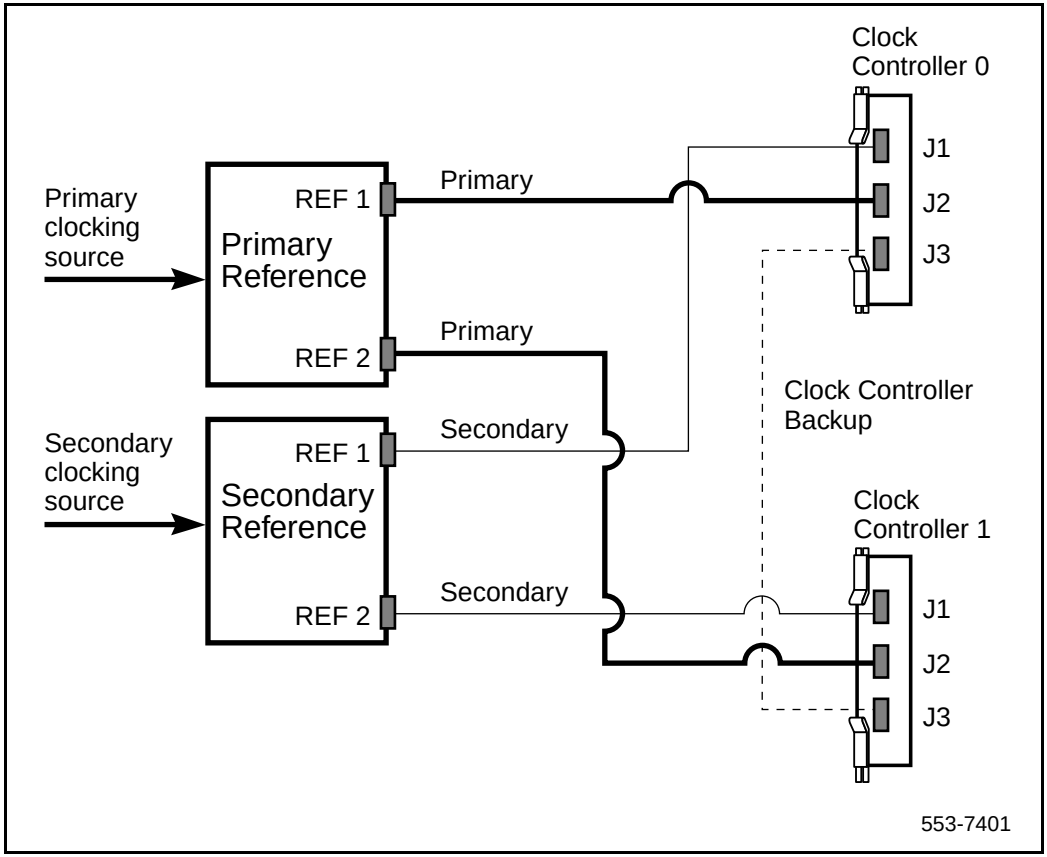


### Free run (non-tracking) mode

The clock synchronization of the Meridian 1 may operate in free-run mode if:

- no loop is defined as the primary or secondary clock reference,

- the primary and secondary references are disabled, or
- the primary and secondary references are in local (near end) alarm.

## Reference clock errors

Meridian 1 software checks at intervals of 1 to 15 minutes to see if a clock controller or reference-clock error has occurred. (The interval of this check can be configured in Overlay 73.)

In tracking mode, at any one time, there is one active clock controller which is tracking on one reference clock. If a clock controller error is detected, the Meridian 1 system switches to the back-up clock controller, without affecting which reference clock is being tracked.

A reference-clock error occurs when there is a problem with the clock driver or with the reference clock at the far end. If the clock controller detects a reference-clock error, the reference clocks are switched.

## Automatic clock recovery

A command for automatic clock recovery can be selected in Overlay 60 with the command EREF.

A DDP loop is disabled when it enters a local-alarm condition. If the local alarm is cleared, the loop is enabled automatically. When the loop is enabled, clock tracking is restored in the following conditions:

- If the loop is assigned as the primary reference clock but the clock controller is tracking on the secondary reference or in free-run mode, it is restored to tracking on primary.
- If the loop is assigned as the secondary reference clock but the clock controller is in free-run mode, it is restored to tracking on secondary.
- If the clock check indicates the switch is in free-run mode:
  - Tracking is restored to the primary reference clock if defined.
  - If the primary reference is disabled or in local alarm, tracking is restored to the secondary reference clock if defined.

***Note:*** If the Meridian 1 was put into free-run mode intentionally by the craftsperson, it will resume tracking on a reference clock unless the clock-switching option has been disabled (LD 60, command MREF), or the reference clock has been “undefined” in the database.

## Automatic clock switching

If the EREF command is selected in Overlay 60, tracking on the primary or secondary reference clock is automatically switched in the following manner:

- If software is unable to track on the assigned primary reference clock, it switches to the secondary reference clock and sends appropriate DTC maintenance messages.
- If software is unable to track on the assigned secondary reference clock, it switches to free run.

## Clock configurations

Clock Controllers may be used in a single CPU system or a dual CPU system.

A single CPU system has one Clock Controller card. This card can receive references clocks from two sources referred to as the primary and secondary sources. These two sources can originate from a PRI, DTI, etc. PRI cards such as the QPC720 are capable of supplying two references of the same clock source. These are known as Ref1 (available at J1) and Ref2 (available at J2) on the QPC720.

The NT5D12 card is capable of supplying two references from each clock source, i.e., four references in total. NT5D12 can thus supply Clk0 and Clk1 from Port 0 and Clk0 and Clk1 from Port 1. Either Port 0 or Port 1 can originate the primary source, as shown in Figure 41 through Figure 44.

There is one new Clock Controller cable required for the new DDP card, which is available in four sizes; this is the NTCG03AA/AB/AC/AD. Refer to “Reference clock cables” on page 95 for more information.

Table 23 summarizes the clock options. Table 24 explains the options in more detail.

**Table 23**
**Clock Controller options- summary**

| CC Option | CPU Type | Notes |
|---|---|---|
| Option 1 | Single | Ref from P0 on Clk0<br>Ref from P1 on Clk0 |
| Option 2 | Dual | Ref from P0 on Clk0<br>Ref from P0 on Clk1 |
| Option 3 | Dual | Ref from P1 on Clk0<br>Ref from P1 on Clk1 |
| Option 4 | Dual | Ref from P0 on Clk0<br>Ref from P0 on Clk1<br>Ref from P1 on Clk0<br>Ref from P1 on Clk1 |

**Table 24**
**Clock Controller options - description (Part 1 of 2)**

| Clock Option | Notes |
|---|---|
| Option 1 | This option provides a single CPU system with 2 clock sources derived from the 2 ports of the DDP.<br>Connector Clk0 provides a clock source from Port 0.<br>Connector Clk0 provides a clock source from Port 1.<br>Refer to Figure 41 "Clock Controller - Option 1" |
| Option 2 | This option provides a Dual CPU system with 2 references of a clock source derived from port 0 of the DDP.<br>Connector Clk0 provides a Ref 1 clock source from Port 0.<br>Connector Clk1 provides a Ref 2 clock source from Port 0.<br>Refer to Figure 42 "Clock Controller - Option 2" |

**Table 24**
**Clock Controller options - description (Part 2 of 2)**

| Clock Option | Notes |
|---|---|
| Option 3 | This option provides a Dual CPU system with 2 references of a clock source derived from port 1 of the DDP.<br>Connector Clk0 provides a Ref 1 clock source from Port 1.<br>Connector Clk1 provides a Ref 2 clock source from Port 1.<br>Refer to Figure 43 "Clock Controller - Option 3" |
| Option 4 | This option provides a Dual CPU system with 2 references from each clock source derived from the DDP.<br>Connector Clk0 provides a Ref 1 clock source from Port 0.<br>Connector Clk1 provides a Ref 2 clock source from Port 0.<br>Connector Clk0 provides a Ref 1 clock source from Port 1.<br>Connector Clk1 provides a Ref 2 clock source from Port 1.<br>Refer to Figure 44 "Clock Controller - Option 4" |

**Figure 41**
**Clock Controller - Option 1**

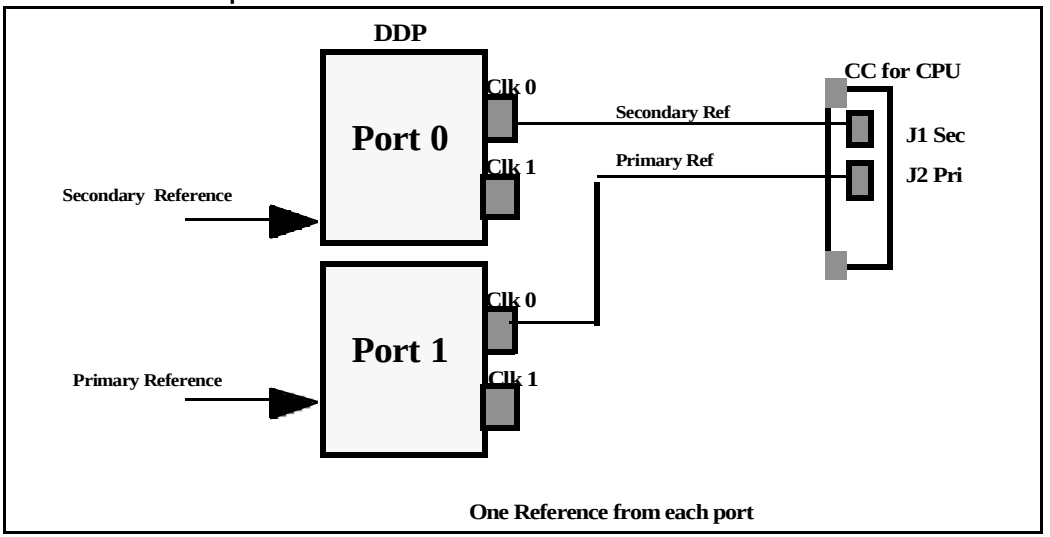

**Figure 42**
**Clock Controller - Option 2**

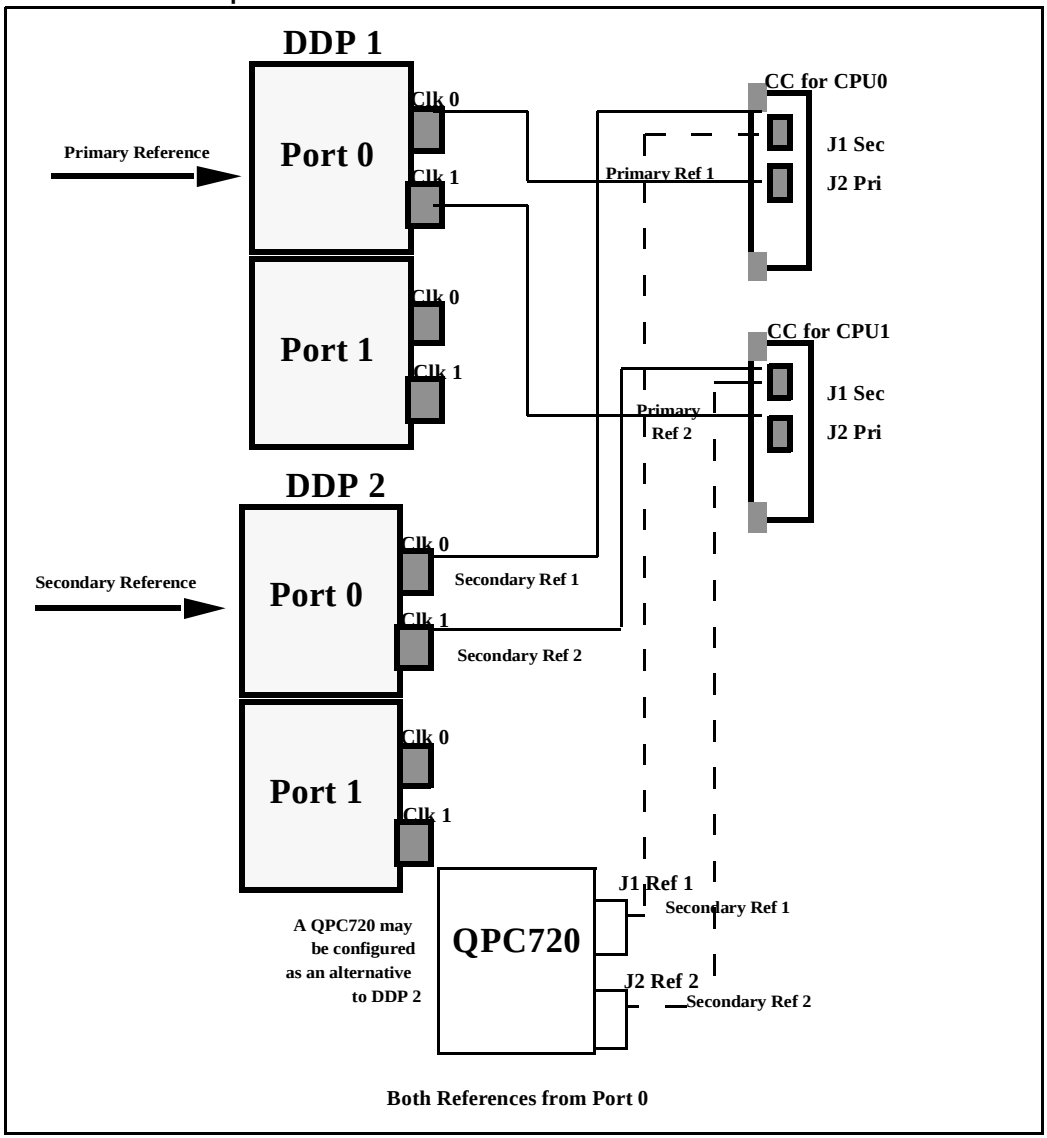

**Figure 43**
**Clock Controller - Option 3**

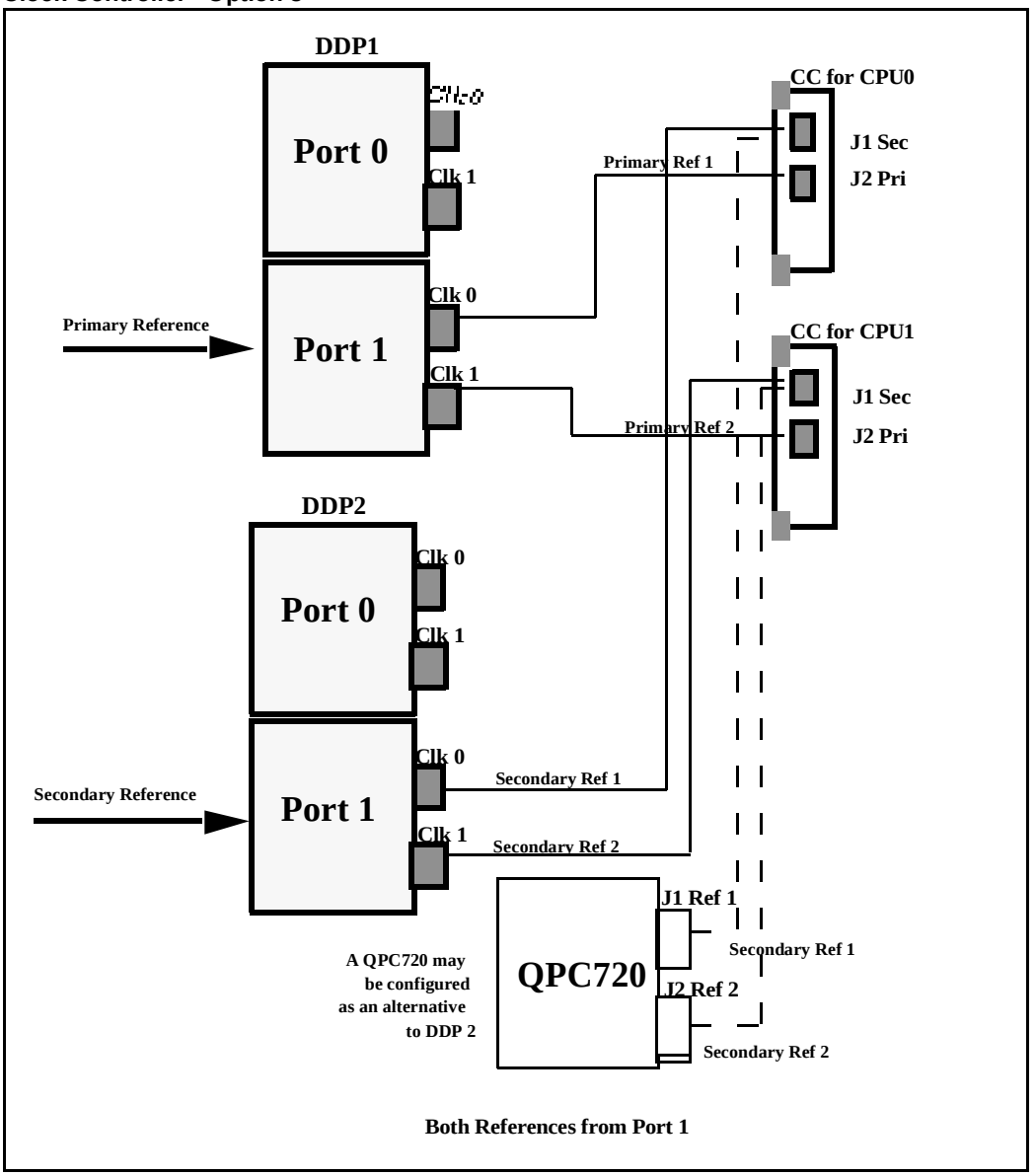

**Figure 44**
**Clock Controller - Option 4**

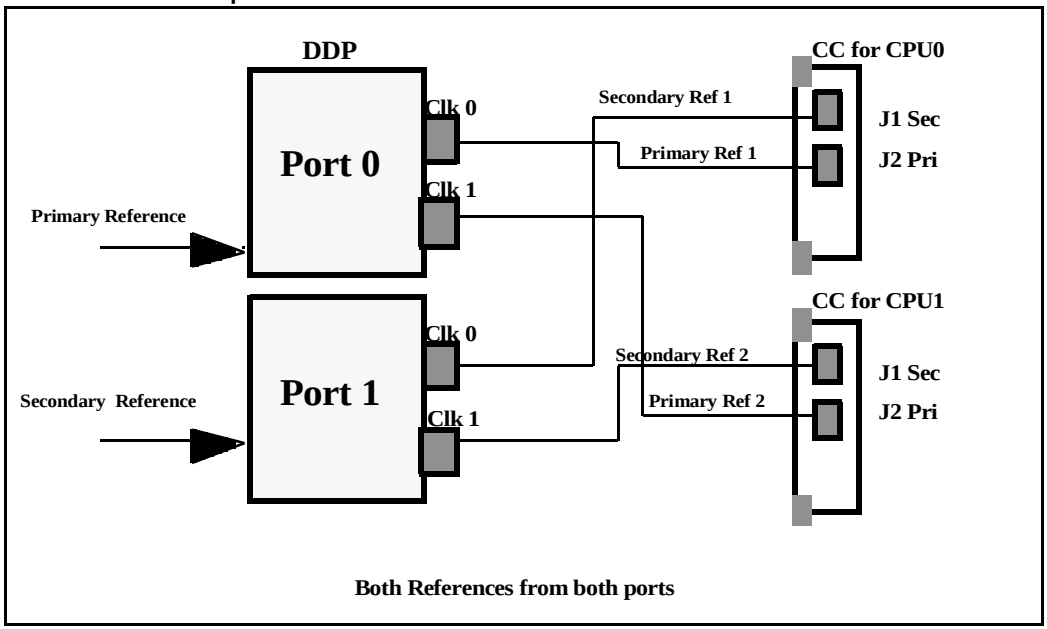

# DCH installation

## Contents

The following are the topics in this section:



## Reference list

The following are the references in this section:

*Circuit Card: Installation and Testing* (553-3001-211)

# Install the NT6D11AB, NT6D11AE, NT6D11AF DCH

Installation procedures for the NT6D11AB, NT6D11AE, and NT6D11AE DCHI cards are the same for Meridian 1 system options 51C, 61C, and 81C. These instructions apply to hardware both for primary and backup D-channels. D-channel lines must be conditioned for 64K before D-channels can be brought up.

> ***Note:*** To configure J1, the asynchronous port on the DCHI card, refer to the documentation of the application being interfaced, and to NTP *Circuit Card: Installation and Testing* (553-3001-211). J1 configuration is not described here.

# Set up the NT6D11AB, NT6D11AE, NT6D11AF DCHI

## DIP switch settings

The NT6D11AB/AE/AF has three sets of DIP switches. Each port has its own bank of 10 DIP switches (SW1 & SW2) to select the port address (8 bits) and mode of operation (2 bits). SW1 is used for port 0 settings, SW2 is used for port 1 settings. SW3 is used to select the D-channel protocol. Port 0 is used to select whether the asynchronous ESDI port is be disabled or not.
Port 1 is used to select the standard or expanded D-channel addressing mode on the NT6D11AB/AE/AF.

The DIP switches are located as shown by Figure 45.

**Figure 45**
**NT6D11 DIP switches**

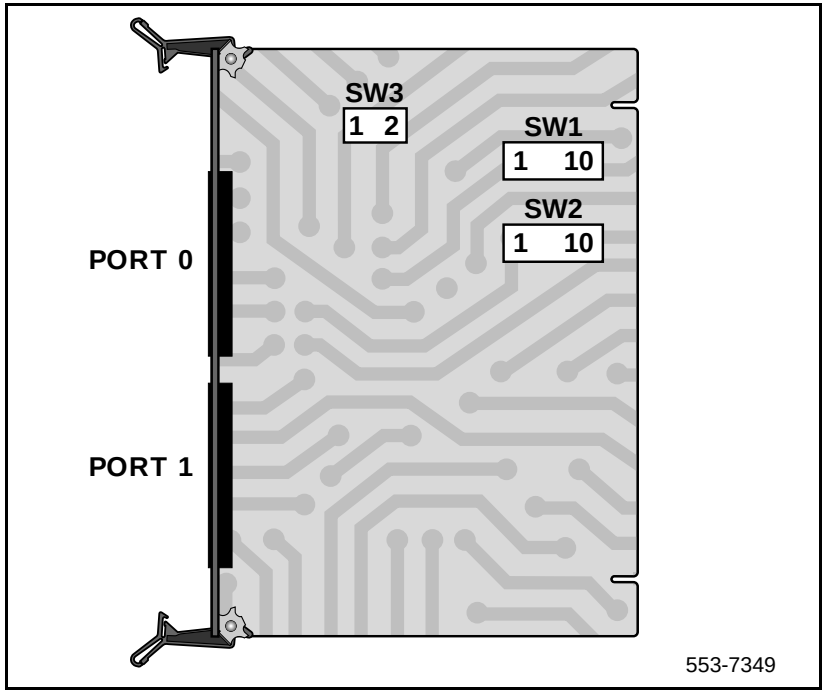


## Protocol selection

SW3 is used to select the D-channel protocol, as shown by Table 25.

***Note:*** The setting must be 1 for ISDN applications.

**Table 25**
**Protocol selection switch settings**

| **Protocol** | **Switch Setting** | |
|---|---|---|
| | SW3.1 | SW3.2 |
| DPNSS1 | 0 | 0 |
| ISDN | 1 | 1 |

## Valid switch combinations

The following are the only allowable switch setting combinations (not including address switch settings).

### Port 0

Port 0 can be configured as asynchronous ESDI, or disabled. If the port is configured as disabled, it will not be visible to the system CPU. Refer to Table 26.

**Table 26**
**Port 0 settings**

| **Mode** | **Switch setting** | | | |
|---|---|---|---|---|
| | SW1.1 | SW1.2 | SW3.1 | SW3.2 |
| Asynchronous ESDI<br>***Note:*** DO NOT USE THIS SELECTION. | 1 | 0 | 0 | 0 |
| Asynchronous ESDI | 1 | 0 | 1 | 1 |
| Port disabled | 1 | 1 | - | - |

### Port 1

The following are the only valid emulation modes combinations. If the port is configured as disabled, it will not be visible to the system CPU. Refer to Table 27.

***Note:*** The ISDN emulation must be selected.

**Table 27**
**Port 1 settings**

| Mode | Emulates | Switch setting | | | |
|---|---|---|---|---|---|
| | | SW2.1 | SW2.2 | SW3.1 | SW3.2 |
| DPNSS1 | NT5K35 | 0 | 0 | 0 | 0 |
| ISDN | NT6D11 | 0 | 0 | 1 | 1 |
| Expanded DPNSS1 | NT5K75 | 0 | 1 | 0 | 0 |
| Port disabled | | 1 | 1 | - | - |

## Jumper settings

The NT6D11AB/AE/AF has two banks of option straps, one for each port. These select between DCE and DTE operation and whether the signalling interface is RS232 or RS422. Refer to Figure 46 and Figure 47.

**Figure 46**
**NT6D11 DCH with ISL high-speed programming jumper settings**

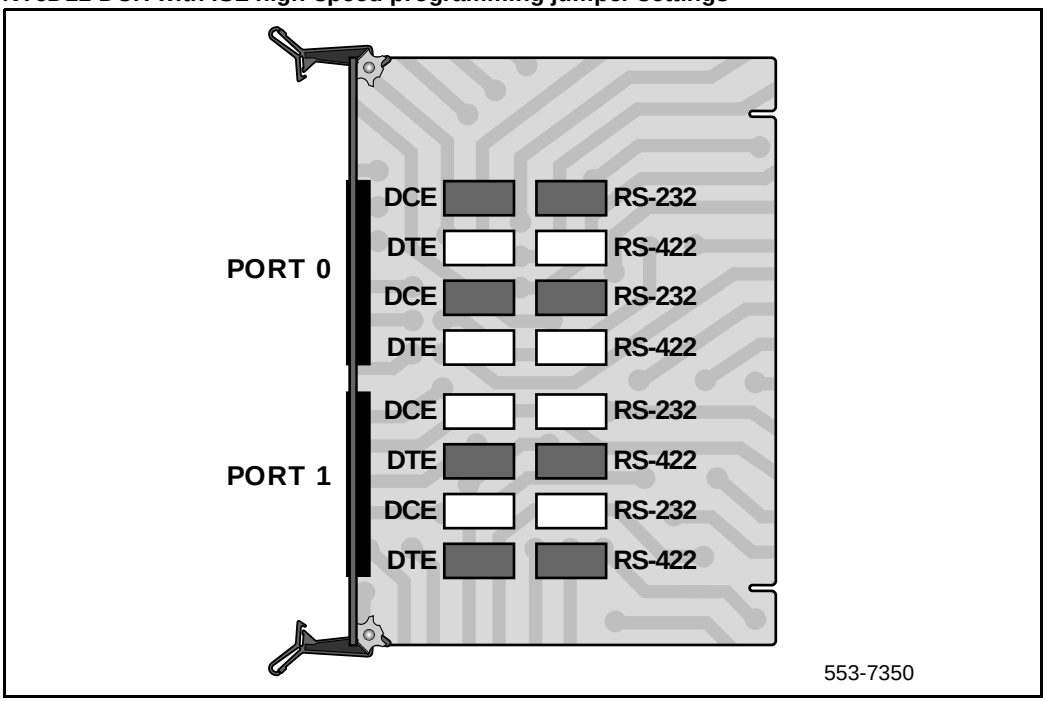

**Figure 47**
**NT6D11 DCH with ISL low-speed programming jumper settings**

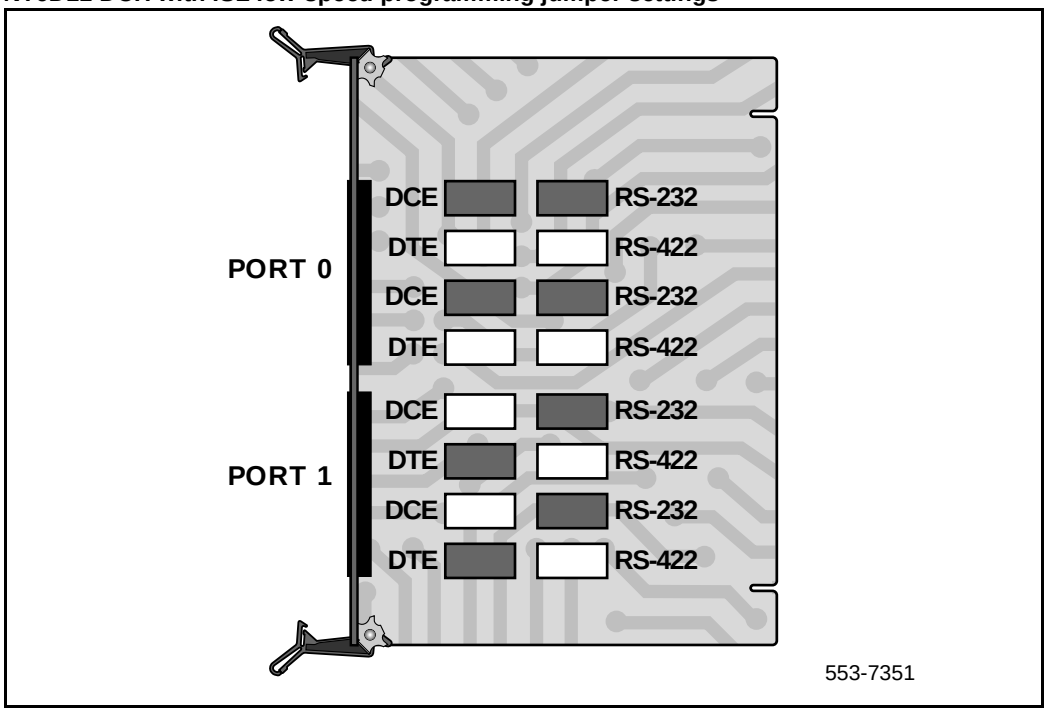


## Port addressing modes

### Port 0 Mode selection

Port 0 is used to select whether the asynchronous ESDI port is be disabled or not. Refer to Table 28.

***Note:*** The asynchronous ESDI port must be set to “disabled”.

**Table 28**
**Port 0 mode selection**

| **Port Mode** | **Switch Setting** | |
|---|---|---|
| | SW1.1 | SW1.2 |
| Not used | 0 | - |
| Asynchronous ESDI | 1 | 0 |
| Port disabled | 1 | 1 |

## Port 1 mode selection

Port 1 is used to select the standard or expanded D-channel addressing mode on the NT6D11AB/AE/AF. Refer to Table 29.

**Table 29**
**Port 1 mode selection**

| **Port Mode** | **Switch Setting** | |
|---|---|---|
| | SW2.1 | SW2.2 |
| Synchronous, D-channel, standard addressing<br>***Note:*** THIS SELECTION MUST BE MADE FOR ISDN. | 0 | 0 |
| Synchronous, D-channel, expanded addressing | 0 | 1 |
| Not used | 1 | 0 |
| Port disabled | 1 | 1 |

## Port address switch settings

### Port address switch settings in the standard mode, for ISDN

Table 30 depicts the port address switch settings that apply to SW1 or SW2, the D-channel port, for ISDN mode.

**Table 30**
**Port address switch settings for ISDN (Part 1 of 2)**

| Port Address | Switch Setting | | | | | | | |
|---|---|---|---|---|---|---|---|---|
| | Half Group No. | | | Device No. | | | | |
| | S3 | S4 | S5 | S6 | S7 | S8 | S9 | S10 |
| 0 | 0 | 0 | 0 | 0 | 0 | 0 | 0 | x |
| 1 | 0 | 0 | 0 | 0 | 0 | 0 | 1 | x |
| 2 | 0 | 0 | 0 | 0 | 0 | 1 | 0 | x |
| 3 | 0 | 0 | 0 | 0 | 0 | 1 | 1 | x |
| 4 | 0 | 0 | 0 | 0 | 1 | 0 | 0 | x |
| 5 | 0 | 0 | 0 | 0 | 1 | 0 | 1 | x |
| 6 | 0 | 0 | 0 | 0 | 1 | 1 | 0 | x |
| 7 | 0 | 0 | 0 | 0 | 1 | 1 | 1 | x |
| 8 | 0 | 0 | 0 | 1 | 0 | 0 | 0 | x |
| 9 | 0 | 0 | 0 | 1 | 0 | 0 | 1 | x |
| 10 | 0 | 0 | 0 | 1 | 0 | 1 | 0 | x |
| 11 | 0 | 0 | 0 | 1 | 0 | 1 | 1 | x |
| 12 | 0 | 0 | 0 | 1 | 1 | 0 | 0 | x |
| 13 | 0 | 0 | 0 | 1 | 1 | 0 | 1 | x |

**Table 30**
**Port address switch settings for ISDN (Part 2 of 2)**

| Port Address | Switch Setting | | | | | | | |
|---|---|---|---|---|---|---|---|---|
| | Half Group No. | | | Device No. | | | | |
| | S3 | S4 | S5 | S6 | S7 | S8 | S9 | S10 |
| 14 | 0 | 0 | 0 | 1 | 1 | 1 | 0 | x |
| 15 | 0 | 0 | 1 | | | | | |
| | | | | | | | | |
| 16-31 | 0 | 0 | 1 | | | | | |
| 32-47 | 0 | 1 | 0 | | | | | |
| 48-63 | 0 | 1 | 1 | | | | | |
| 64-79 | 1 | 0 | 0 | | | | | |
| 80-95 | 1 | 0 | 1 | | | | | |
| 96-111 | 1 | 1 | 0 | | | | | |
| 112-127 | 1 | 1 | 1 | | | | | |

# Install the NT6D11AB, NT6D11AE, NT6D11AF DCHI

## Task summary list

The following is a summary of the tasks in this section:

**1** Install the NT6D11AB, NT6D11AE, NT6D11AF DCH

Follow Procedure 1 to install the NT6D11 DCH on Meridian 1 Options 51C, 61C, and 81C.

**Procedure 1**
**Install the NT6D11AB, NT6D11AE, NT6D11AF DCH**

**1** Determine the cabinet and shelf location for the circuit pack being installed.

The NT6D11AB, NT6D11AE, or NT6D11AF DCHI card can be installed in any slot appropriate for an I/O port card on a Network shelf. (The NT6D11 DCHI card can be located on the Common Equipment shelf only on single-CPU switches.)

**2** Unpack and inspect card.

**3** Set option switches on the DCHI card. For PRA capability, set port J2 to odd. For ISL capability, set port J2 for high speed or low speed operation (See Figure 46, Figure 47, and Table 30).

**4** Set faceplate toggle switch to DISABLE.

**5** Install DCHI card into the assigned shelf and slot.

**6** Connect DCHI port J2 to the NT8D72AB or NT8D72BA PRI port J5 with a QCAD328A cable.

**7** Set faceplate toggle switch to ENABLE.

**8** Coordinate the start-up and verification of the DCHI with the start-up of the PRI.

**9** Enable the DCHI card using Overlay 96, command ENL DCHI N..

# Remove the NT6D11AB, NT6D11AE, NT6D11AF DCH

## Task summary list

The following is a summary of the tasks in this section:

**1** Remove the NT6D11AB, NT6D11AE, NT6D11AF DCH

Use Procedure 2 to remove the NT6D11AB, NT6D11AE, NT6D11AF DCH from Meridian 1 options 51C, 61C, and 81C

**CAUTION**
The NT6D11AB, NT6D11AE, NT6D11AF DCH must be software disabled before it is hardware disabled, or initialization will occur.

**Procedure 2**
**Remove the NT6D11AB, NT6D11AE, NT6D11AF DCH**

**1** Disable the NT6D11AB, NT6D11AE, NT6D11AF DCHI using Overlay 96, command DIS DCHI N.

**2** If asynchronous port J1 is enabled, it must also be software disabled, using Overlay 37, or initialization will occur.

**3** If the circuit pack is being completely removed, not replaced, remove data from memory.

**4** Determine the cabinet and shelf location of the card to be removed.

**5** Set faceplate toggle switch to DISABLE.

**6** Disconnect NT6D11AB, NT6D11AE, NT6D11AF DCHI cables.

**7** Remove NT6D11AB, NT6D11AE, NT6D11AF DCHI card.

**8** Pack and store card.

# Install the QPC757 DCH

## Task summary list

The following is a summary of the tasks in this section:

**1** Install the QPC757 DCHI

Installation procedures for the QPC757 DCHI card are the same for Meridian 1 system options 51C, 61C, and 81C. These procedures apply to both primary and backup D-channels. See Figures 48 and 49 and Table 31 for option switch settings per port number of the DCHI card, in Primary Rate Interface mode.

Use Procedure 3 to install the QPC757 DCHI card on Meridian 1 system options 51C, 61C, and 81C.

**Procedure 3**
**Install the QPC757 DCHI**

**1** Determine the cabinet and shelf location of the circuit card to be installed.

The QPC757 DCHI card can be installed in any slot appropriate for an I/O port card on a network shelf. For single CPU systems only, the QPC757 DCHI card can be located on the Common Equipment (CE) shelf.

**2** Unpack and inspect card.

**3** Set option switches and jumper plugs on the DCHI card. For PRI capability, set port J2 to odd. For ISL capability, set port J2 for high speed or low speed programming.

**4** Set faceplate toggle switch to DISABLE.

**5** Install DCHI card into the assigned shelf or module and slot.

**6** Run and connect DCHI cables: connect QPC757 J2 to QPC720 PRI J5 with a QCAD328A cable.

**7** Set faceplate toggle switch to ENABLE.

**8** Enable the loop in LD 60.

**9** Coordinate start-up and verification of the DCHI with the start-up of the PRI.

**10** Enable the DCHI card using LD 96, command ENL DCH x.

**Figure 48**
**QPC757 option and PRI/ISL high speed programming switch settings**

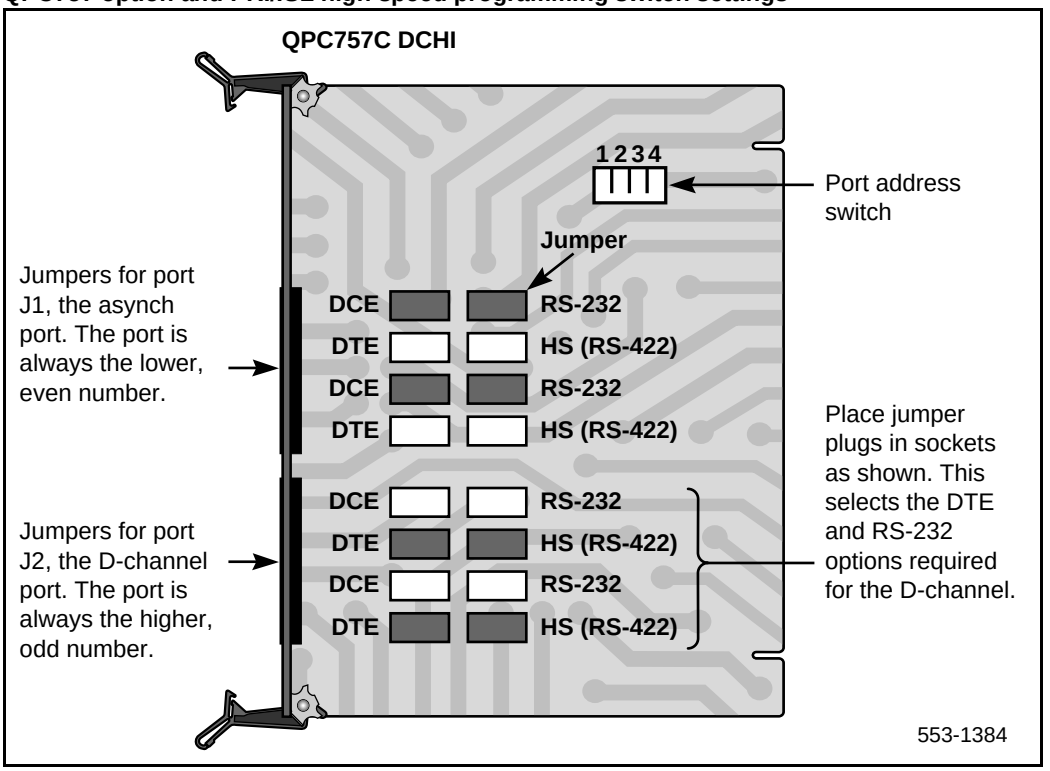

**Figure 49**
**QPC757 option and PRI/ISL low speed programming switch settings**

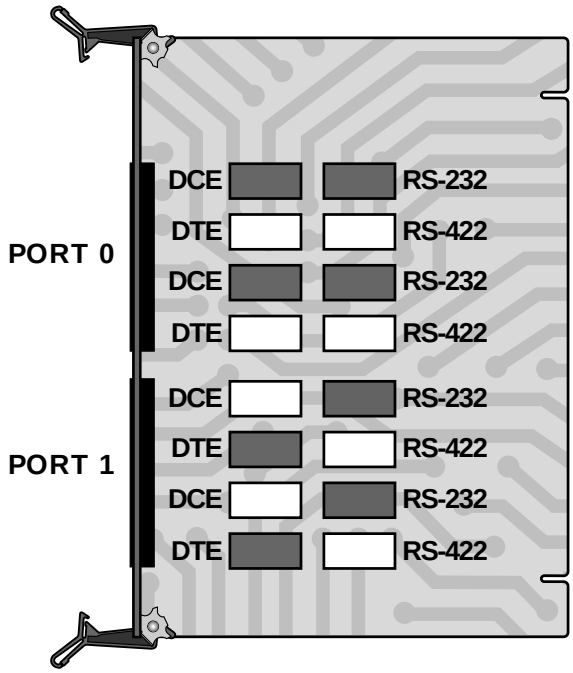

## Port address switch settings

Table 31 shows the port address switch settings that apply to SW1, SW2 (the D-channel port), SW3, and SW4.

**Table 31**
**D-channel port address switch settings for PRI**

| Port Number | | Port Address Switch Settings | | | |
|---|---|---|---|---|---|
| J1 | J2 | SW1 | SW2 | SW3 | SW4 |
| 0 | 1 | Off | Off | Off | Off |
| 2 | 2 | Off | Off | On | Off |
| 4 | 5 | Off | On | Off | Off |
| 6 | 7 | Off | On | On | Off |
| 8 | 9 | On | Off | Off | Off |
| 10 | 11 | On | Off | On | Off |
| 12 | 13 | On | On | Off | Off |
| 14 | 15 | On | On | On | Off |

## D-channel parameter downloading

The Meridian 1 software automatically downloads new parameters to each D-channel Interface (DCHI) circuit card upon SYSLOAD. When this occurs, the D-channel is temporarily disabled and then automatically reenabled.

Three situations require manual disabling and reenabling of each DCHI to ensure parameter downloading:

- Performing a parallel load and switching over to the second CPU
- Following an alarm condition for the T1 loop carrying the D-channel (but the D-channel is still operational)
- Following SYSLOAD when using ISDN Signaling Link (ISL)

# Remove the QPC757 DCHI

## Task summary list

The following is a summary of the tasks in this section:

**1** Remove the QPC757 DCH

Use Procedure 4 to remove the QPC757 DCHI card from Meridian 1 system Options 51C, 61C, and 81C.

**CAUTION**
The QPC757 DCH must be software disabled before it is hardware disabled to prevent initialization

**Procedure 4**
**Remove the QPC757 DCH**

**1** Disable the QPC757 DCHI using LD 96, command DIS DCH x.

**2** Disable asynchronous port J1 in LD 48 to prevent initialization.

**3** Disable loop in LD 60.

**4** If the circuit card is being removed, not replaced, remove data from memory.

**5** Determine the cabinet and shelf location of the card to be removed.

**6** Set faceplate toggle switch to DISABLE.

**7** Disconnect QPC757 DCHI cables.

**8** Remove QPC757 DCHI card.

**9** Pack and store circuit card.

# NTBK51 DDCH installation and removal

## Contents

This section contains information on the following topics:



## Reference list

The following are the references in this section:

- *Spares Planning* (553-3001-153)

# Introduction

This chapter provides installation and removal procedures for the NTBK51 Downloadable D-channel Daughterboard, for the NT5D12 NTCK43 dual-port PRI2 card, the NT5D97 dual-port DTI2/PRI2 card, and the NT5D12 dual-port 1.5 Mb DTI/PRI card on Meridian 1 options 51C, 61C, and 81C.

***Note 1:*** The only version of the NTBK51 DDCH that can be used on an NTCK43, NT5D97, or NT5D12 installed on a Meridian 1 options 51C, 61C, or 81C, is the NTBK51**AA**. Vintage NTBK51**BA** cannot be used, due to a different pin configuration (the NTBK51BA is used on the Meridian 1 Option 11C.)

***Note 2:*** Note to installers. Before beginning an installation:

Consult the *Spares Planning* (553-3001-153) document and follow the instructions.

Bring spares of all cables and boards.

Remember that test procedures require a 24-hour minimum bit error-rate testing before being used.

Either the DDCH, the MSDL, or the NTCK43, NT5D97, or NT5D12 card may be installed first. However, NTCK43 and NT5D97 PRI2 loops, and NT5D12 PRI loops, must be configured in software before defining DCH links.

# Install NTBK51 DDCH for NTCK43 dual-port PRI2 card

## Task summary list

The following is a summary of the tasks in this section:

**1** . Install the NTBK51 on the NTCK43 dual-port PRI2 card.

Installation procedures for the NTBK51 DDCH are the same for Meridian 1 system options 51C, 61C, and 81C. Use Procedure 5 below.

Set the address for the DDCH. If a DDCH is present on a Dual PRI pack then an external D-channel should not be connected to P3. If a DDCH is present the LED “DCH” will light up.

The DDCH can be mounted on any Dual PRI card except those in slots that are occupied by BTUs.

**CAUTION**
The static discharge bracelet located inside the cabinet must be worn before handling circuit cards. Failure to wear the bracelet can result in damage to the circuit cards.

**Procedure 5.**
**Install the NTBK51 on the NTCK43 dual-port PRI2 card**

**1** Unpack and inspect the NTBK51 DDCH Daughterboard.

The DDCH comes with 4 stand-offs so that it can be mounted onto the Dual PRI. These are easily pushed into 4 corresponding mounting holes on the Dual PRI.

**2** Mount the NTBK51 so that it mates correctly with P9 and P11 on the Dual PRI motherboard.

# Remove NTBK51 DDCH from NTCK43 dual-port PRI2 card

## Task summary list

The following is a summary of the tasks in this section:

**1** Remove the NTBK51 from the NTCK43 dual-port PRI2 card

Removal procedures for the NTBK51 DDCH are the same for Meridian 1 system options 51C, 61C, and 81C. Use Procedure 6 below.

The DDCH can only be removed when it is disabled in S/W. The associated PRI link must also be disabled.

**CAUTION**
The static discharge bracelet located inside the cabinet must be worn before handling circuit cards. Failure to wear the bracelet can result in damage to the circuit cards.

**Procedure 6**
**Remove the NTBK51 from the NTCK43 dual-port PRI2 card**

**1** Disable the faceplate switch on the Dual PRI. If S1 is not disabled the Meridian 1 system will initialize.

**2** Remove the NTBK51 from the NTCK43 Dual-port PRI2 PRI card.

# Install NTBK51 DDCH on NT5D97 dual-port DTI2/PRI2 card

## Task summary list

The following is a summary of the tasks in this section:

**1** Install the NTBK51 on the NT5D97 dual-port DTI2/PRI2 card

Installation procedures for the NTBK51 DDCH are the same for Meridian 1 system options 51C, 61C, and 81C. Use Procedure 7 below.

The DDCH can be mounted on any NT5D97 DDP2 card. Set the address for the DDCH (see the switch settings section to set the address). If a DDCH is present on a DDP2 card then an external D-channel should not be connected to J6. If a DDCH is present the LED “DDCH” will light up.

**CAUTION**
The static discharge bracelet located inside the cabinet must be worn before handling circuit cards. Failure to wear the bracelet can result in damage to the circuit cards.

**Procedure 7**
**Install the NTBK51 on the NT5D97 dual-port DTI2/PRI2 card**

**1** Unpack and inspect the DDCH daughterboard.

The DDCH comes with four stand-offs so that it can be mounted onto the NT5D97. These are easily pushed into 4 corresponding mounting holes on the DDP2.

**2** Mount the DDCH so that it mates with P2 and P3 on the NT5D97 motherboard.

**3** Set the DDP2 ENB/DIS faceplate switch to Enable (ON).

The DDCH LED should flash three times.

# Remove NTBK51 DDCH from NT5D97 dual-port DTI2/PRI2 card

## Task summary list

The following is a summary of the tasks in this section:

**1** Remove the NTBK51 from the NT5D97 dual-port DTI2/PRI2 card

Removal procedures for the NTBK51 DDCH are the same for Meridian 1 system options 51C, 61C, and 81C. Use Procedure 8 below.

**CAUTION**
The static discharge bracelet located inside the cabinet must be worn before handling circuit cards. Failure to wear the bracelet can result in damage to the circuit cards.

**Procedure 8**
**Remove the NTBK51 from the NT5D97 dual-port DTI2/PRI2 card**

The NTBK51 can only be removed when it is disabled in software.

Both ports of the associated DDP2 card must be disabled.

**1** Set the DDP2 ENB/DIS faceplate switch to Disable (OFF).

**2** Remove the DDP2 and the DDCH.

# Install the NTBK51 DDCH on the NT5D12 dual-port DTI/PRI

## Task summary list

The following is a summary of the tasks in this section:

**1** Install the NTBK51 on the NT5D12 dual-port DTI/PRI card

Installation procedures for the NTBK51 DDCH are the same for Meridian 1 system options 51C, 61C, and 81C. Use Procedure 9 below.

Set the address for the DDCH (see the switch settings section to set the address). If a DDCH is present on a DDP card then an external D-channel should not be connected to J6. If a DDCH is present the LED “DCH” will light up.

> **CAUTION**
> The static discharge bracelet located inside the cabinet must be worn before handling circuit cards. Failure to wear the bracelet can result in damage to the circuit cards.

**Procedure 9**
**Install the NTBK51 on the NT5D12 dual-port DTI/PRI card**

The DDCH can be mounted on any DDP card.

**1** Unpack and inspect the DDCH daughterboard.

The DDCH comes with four stand-offs so that it can be mounted onto the DDP. These are easily pushed into 4 corresponding mounting holes on the DDP.

**2** Mount the NTBK51 DDCH so that it mates correctly with P2 and P3 on the NT5D12 DDP motherboard.

# Remove NTBK51 DDCH from NT5D12 dual-port DTI/PRI

## Task summary list

The following is a summary of the tasks in this section:

**1** Remove the NTBK51 from the NT5D12 dual-port DTI/PRI card

Removal procedures for the NTBK51 DDCH are the same for Meridian 1 system options 51C, 61C, and 81C. Use Procedure 10 below.

> **CAUTION**
> The static discharge bracelet located inside the cabinet must be worn before handling circuit cards. Failure to wear the bracelet can result in damage to the circuit cards.

**Procedure 10**
**Remove the NTBK51 from the NT5D12 dual-port DTI/PRI card**

The DDCH can only be removed when it is disabled in software.

Both ports of the associated DDP card must be disabled.

**1** Disable the faceplate switch on the DDP.

**2** Remove the DDP and DDCH.

# MSDL installation for all systems

## Contents

The following are the topics in this section:



## Reference list

The following are the references in this section:

- *Multi-Purpose Serial Data Link: Description* (553-3001-195)
- *System Messages Guide* (553-3001-411)

## Install the MSDL

### Task summary list

The following is a summary of the tasks in this section:

**1** Install the MSDL card

Installation procedures for the MSDL card are the same for Meridian 1 system options 51C, 61C, and 81C. Use Procedure 11 below. See Figure 50, and Table 32 for the port and interface switch settings.

The MSDL card can go into the following slots:

| | |
|---|---|
| 51C, 61C | CPU/Network Module slot 1–8, 13 |
| 81C | Network Module slot 5–14 |

Refer to *System Messages Guide* (553-3001-411) and *Multi-Purpose Serial Data Link: Description* (553-3001-195) for more information.

**Procedure 11**
**Install the MSDL card**

**1** Determine module and slot location for the MSDL card. Unpack and inspect the MSDL card.

**2** Set the MSDL switch settings to correspond to Table 32, and Figure 50.

**3** Insert the MSDL card into the selected card slot of the module following the card guides.

**4** Observe the red LED on the MSDL faceplate. If it turns on, flashes three times, and stays on continuously, the MSDL is operating correctly but is not yet enabled.

If the LED turns on and stays on continuously without flashing three times, the card may be defective. Go to step 8.

**5** Run and connect NT6D80 to the PRI card MSDL interface with the appropriate cable.

**6** Enable the MSDL card in LD96.

**7** Unplug the MSDL card and reinsert it. If the red LED still does not flash three times, leave the card installed for approximately 10 minutes to allow the card to be initialized.

**8** After 10 minutes unplug the card, reinsert it and if the card still does not flash three times, the card is defective and must be replaced.

**Figure 50**
**MSDL card layout**

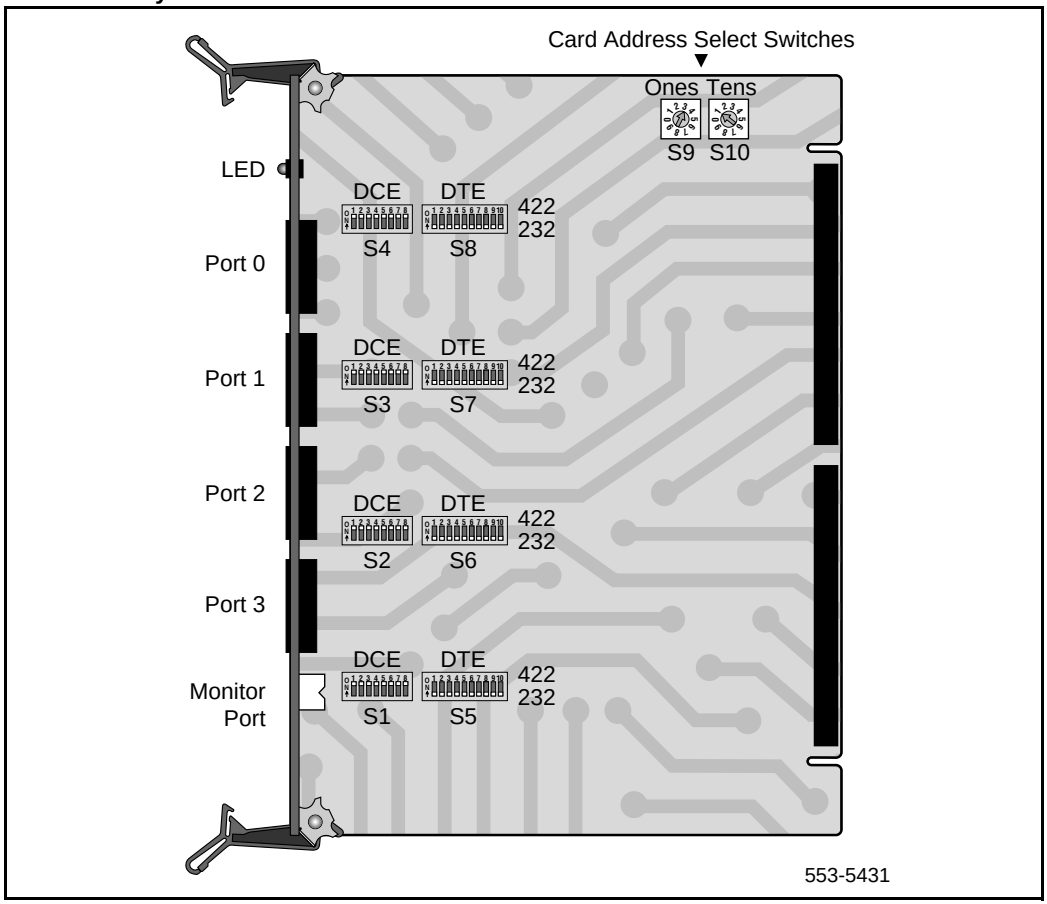


**Table 32**
**MSDL switch settings (Part 1 of 2)**

| | Port 0—SW4 | | | | | | | | Port 0—SW8 | | | | | | | | | |
|---|---|---|---|---|---|---|---|---|---|---|---|---|---|---|---|---|---|---|
| **RS-232-D** | off | off | off | off | off | off | off | off | off | off | off | off | off | off | off | off | off | off |
| **RS-422-A DTE** | off | off | off | off | off | off | off | off | on | on | on | on | on | on | on | on | on | on |

**Table 32**
**MSDL switch settings (Part 2 of 2)**

| | | | | | | | | | | | | | | | | | | |
|---|---|---|---|---|---|---|---|---|---|---|---|---|---|---|---|---|---|---|
| **RS-422-A DCE** | on | on | on | on | on | on | on | on | off | off | off | off | off | off | off | off | off | off |
| | **Port 1—SW3** | | | | | | | | **Port 1—SW7** | | | | | | | | | |
| **RS-232-D** | off | off | off | off | off | off | off | off | off | off | off | off | off | off | off | off | off | off |
| **RS-422-A DTE** | off | off | off | off | off | off | off | off | on | on | on | on | on | on | on | on | on | on |
| **RS-422-A DCE** | on | on | on | on | on | on | on | on | off | off | off | off | off | off | off | off | off | off |
| | **Port 2—SW2** | | | | | | | | **Port 2—SW6** | | | | | | | | | |
| **RS-232-D** | off | off | off | off | off | off | off | off | off | off | off | off | off | off | off | off | off | off |
| **RS-422-A DTE** | off | off | off | off | off | off | off | off | on | on | on | on | on | on | on | on | on | on |
| **RS-422-A DCE** | on | on | on | on | on | on | on | on | off | off | off | off | off | off | off | off | off | off |
| | **Port 3—SW1** | | | | | | | | **Port 3—SW5** | | | | | | | | | |
| **RS-232-D** | off | off | off | off | off | off | off | off | off | off | off | off | off | off | off | off | off | off |
| **RS-422-A DTE** | off | off | off | off | off | off | off | off | on | on | on | on | on | on | on | on | on | on |
| **RS-422-A DCE** | on | on | on | on | on | on | on | on | off | off | off | off | off | off | off | off | off | off |

# Replace the MSDL

## Task summary list

The following is a summary of the tasks in this section:

**1** Replace the MSDL card

Replacement procedures for the MSDL card are the same for Meridian 1 system options 51C, 61C, and 81C. Use Procedure 12 below.

**Procedure 12**
**Replace the MSDL card**

**1** Disable the MSDL card in LD 96.

**2** Disconnect MSDL to PRI cables.

**3** Remove the faulty MSDL card.

**4** Unpack and inspect the new MSDL card.

**5** Set the MSDL switch settings to correspond to Table 32 and Figure 50.

**6** Insert the new MSDL card into the selected card slot of the module following the card guides.

**7** Observe the red LED on the MSDL faceplate. If it turns on, flashes three times, and stays on continuously, the MSDL is operating correctly but is not yet enabled.

If the LED turns on and stays on continuously without flashing three times, the card may be defective. Go to step 11.

**8** Run and connect NT6D80 to the PRI card MSDL interface with the appropriate cable.

**9** Enable the MSDL card in LD 96.

**10** Unplug the MSDL card and reinsert it. If the red LED still does not flash three times, leave the card installed for approximately 10 minutes to allow the card to be initialized.

**11** After 10 minutes unplug the card, reinsert it, and if the card still does not flash three times, the card is defective and must be replaced.

# NT8D72 and QPC720 PRI card installation

## Contents

The following are the topics in this section:



## Reference list

The following are the references in this section:

- *Option 11C 1.5Mb DTI/PRI* (553-3011-310)
- *Option 11C 2.0Mb DTI/PRI* (553-3011-315)

## Introduction

This chapter contains information on how to install the 2.0 Mb NT8D72 and the 1.5 Mb QPC720 PRI cards, on Meridian 1 Options 51C, 61C, and 81C.

Information on how to install the dual-port cards (the NTCK43, NT5D97, and NT5D12) is contained elsewhere in this document.

Information on how to install Meridian 1 Option 11C specific PRI cards is found in the documents *Option 11C 1.5Mb DTI/PRI* (553-3011-310) and *Option 11C 2.0Mb DTI/PRI* (553-3011-315).

## PRI circuit pack locations

The PRI circuit pack occupies two adjacent slots on a shelf. As many as five circuit packs can be plugged into an empty Network shelf, along with a Power Converter circuit pack. Specific locations will depend on available space.

> ***Note 1:*** Due to physical width, Bus Terminating Units (BTUs) and PRIs cannot fit next to each other on a shelf.
>
> ***Note 2:*** This chapter includes instructions for installing an additional network shelf on Meridian 1 Options 51C and 61C (when no vacant Network slots are available to install PRI packs, additional network shelves can replace Peripheral Equipment shelves located on the rear of the Common Equipment or Disk shelves.) Refer to “Install an additional network shelf” on page 167.

## Cable requirements

Shielded 22 AWG (0.644 mm) cables are recommended for connecting the PRI to the cross-connect point. This cable consists of two twisted-pair conductors.

The transmit and the receive pairs must be enclosed in a polyvinyl jacket. This type of cable is commonly referred to as "6-conductor" cable. The cable should be grounded at the cross-connect point.

In addition to twisted-pair conductors, 75-ohm coaxial cable can also be used to provide connection to the office repeater or line terminating unit (LTU).

To manufacture cables of lengths different than those of the standard cables provided, (to manufacture cables of lengths different than those of the standard cables provided, see the "Non-standard cables" section of this practice.)

For the 2.0 Mb NT8D72 PRI card, see Figures 51, 52, 53, and 54 on page 144 for half-group and single-group cabling arrangements applying to Meridian 1 system Options 51C and 61C; also, refer to Table 33 on page 156. For the 2.0 NT8D72 on Option 81C, see Figures 55 and 56 on page 148; also refer to Table 34 on page 157.

For the 1.5 Mb QPC720 PRI card on Meridian 1 system Options 51C and 61C, see Figures 57, 58, 59, and on page 150; also, refer to Table 35 on page 158. For the QPC720 on Option 81C, see Figures 61 and 62 on page 154; also refer to Table 36 on page 160.

**Figure 51**
**Half-group cabling for the NT8D72 on Options 51C and 61C, without an echo canceller**

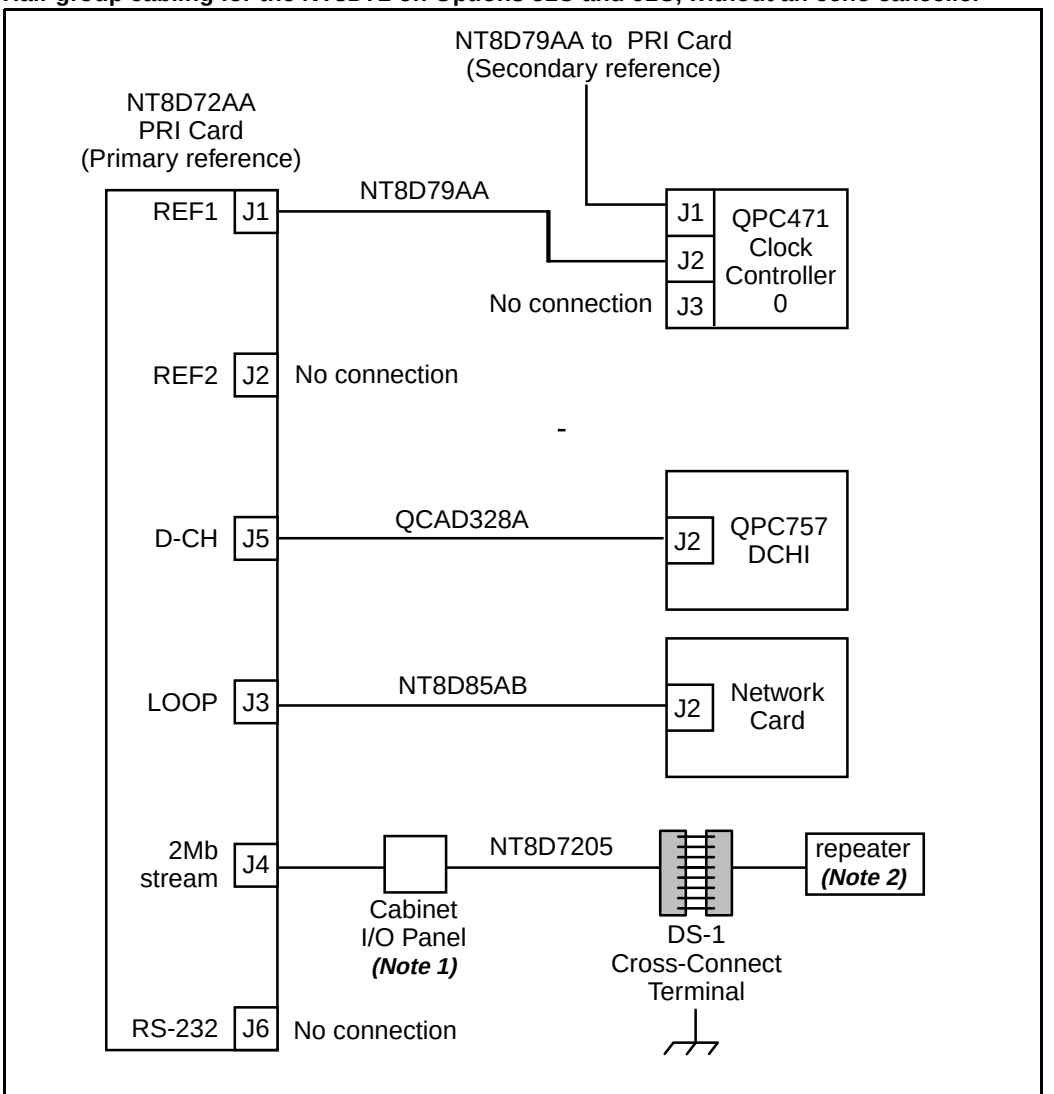


***Note 1:*** Maximum cable distance from PRI card to cross connect is 200 m (655 ft) .
***Note 2:*** Maximum cable distance from PRI card to repeater is 229 m (750 ft).

553-1389

**Figure 52**
**Half group cabling for the NT8D72 on Options 51C and 61C, with echo canceller**

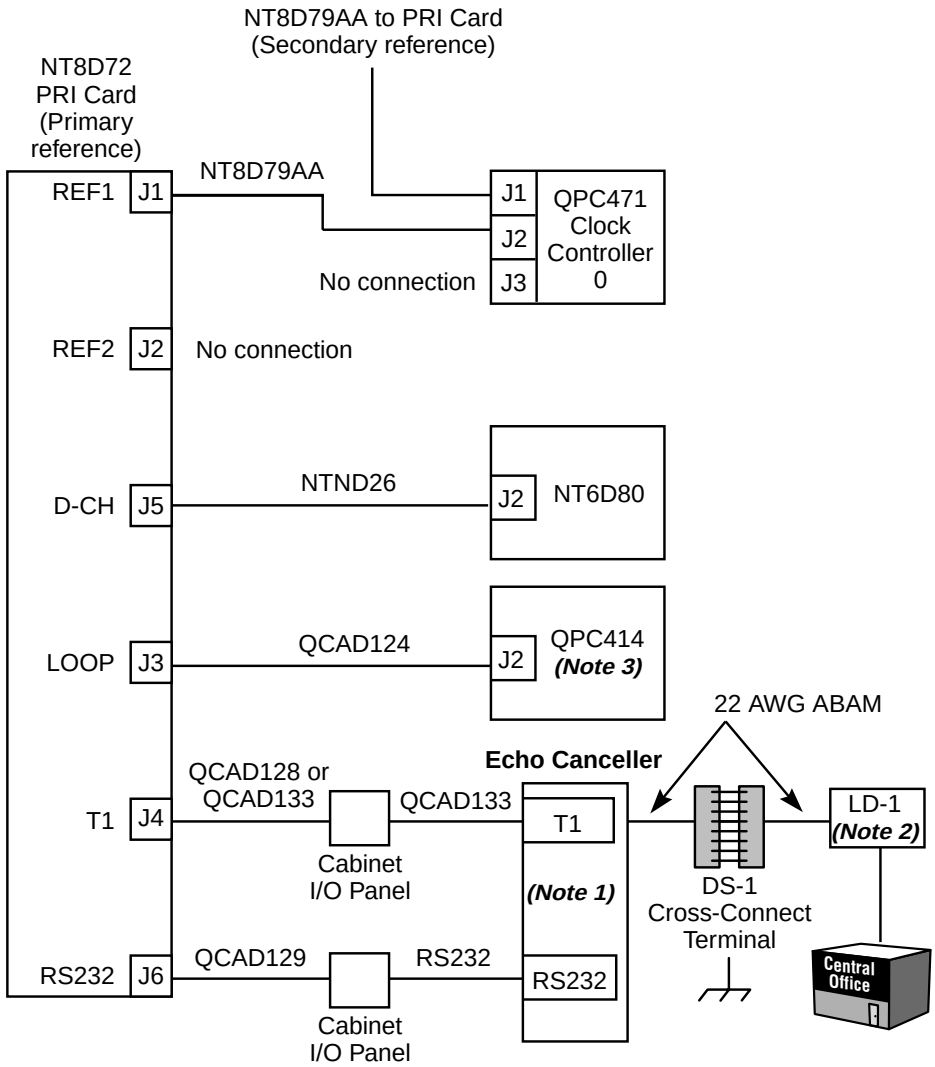


***Note 1:*** Maximum cable distance from PRI card to DS-1 cross connect is 200 m (655 ft).
***Note 2:*** Maximum cable distance from PRI card to LD-1 is 229 m (750 ft).
***Note 3:*** QPC720 does not interface with NT8D04 Superloop Network Card.

553-1390

**Figure 53**
**Single-group cabling for the NT8D72 on Options 51C and 61C, without echo canceller**

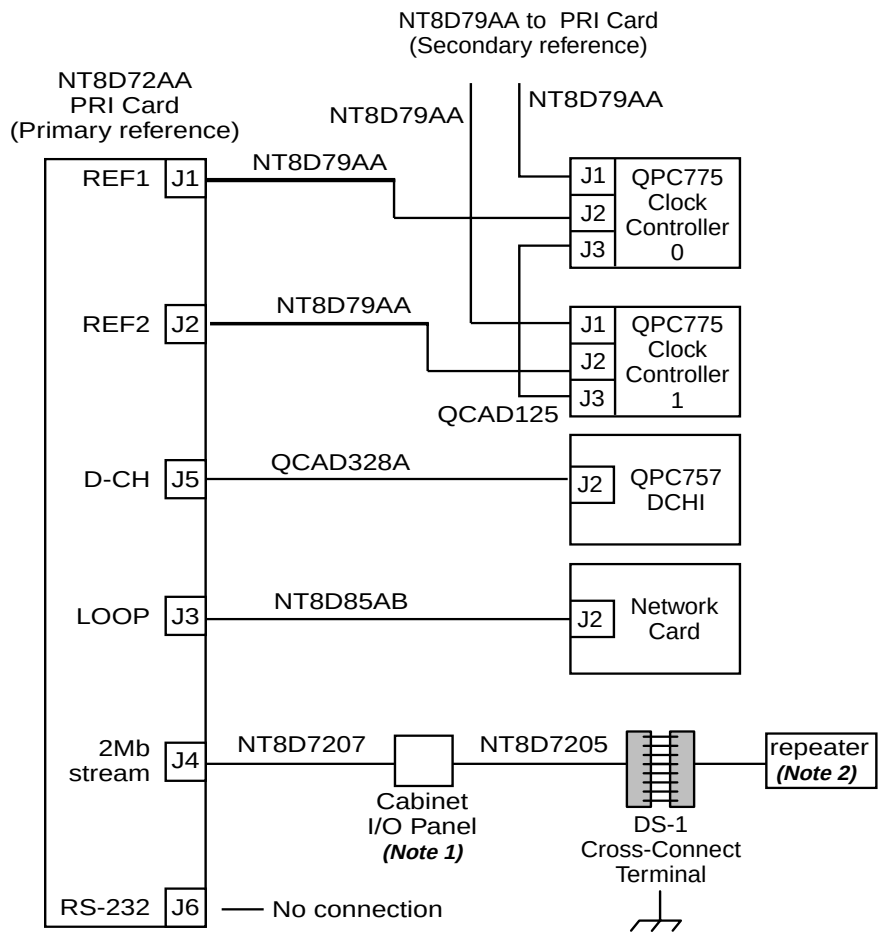


***Note 1:*** Maximum cable distance from PRI card to cross connect is 200 m (655 ft) .
***Note 2:*** Maximum cable distance from PRI card to repeater is 229 m (750 ft).

553-1391

**Figure 54**
**Single group cabling for the NT8D72 on Options 51C and 61C, with echo canceller**

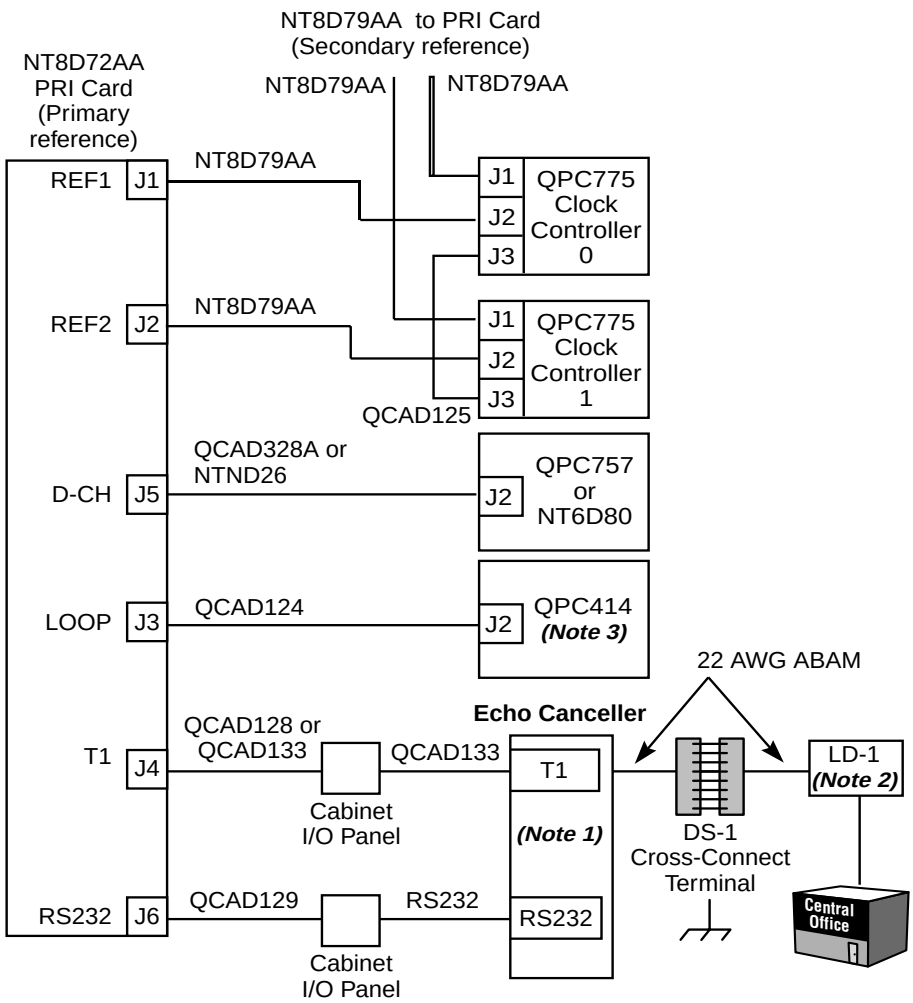


***Note 1:*** Maximum cable distance from PRI card to DS-1 cross connect is 200 m (655 ft).
***Note 2:*** Maximum cable distance from PRI card to LD-1 is 229 m (750 ft).
***Note 3:*** QPC720 does not interface with NT8D04 Superloop Network Card.

553-1392

**Figure 55**
**Cabling for the NT8D72 on Option 81C without echo canceller**

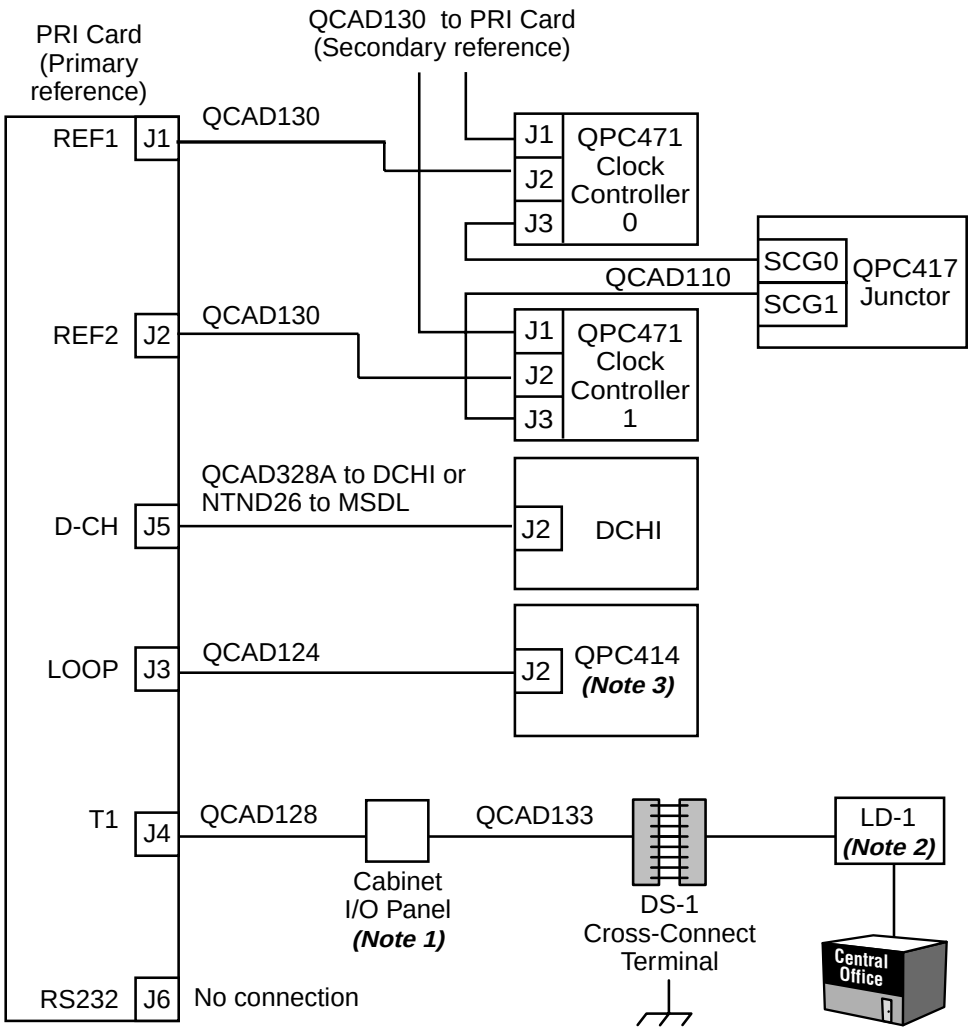


***Note 1:*** Maximum cable distance from PRI card to DS-1 cross connect is 200 m (655 ft).
***Note 2:*** Maximum cable distance from PRI card to LD-1 is 229 m (750 ft).
***Note 3:*** QPC720 does not interface with NT8D04 Superloop Network Card.

553-7366

**Figure 56**
**Cabling for the NT8D72 on Option 81C with echo canceller**

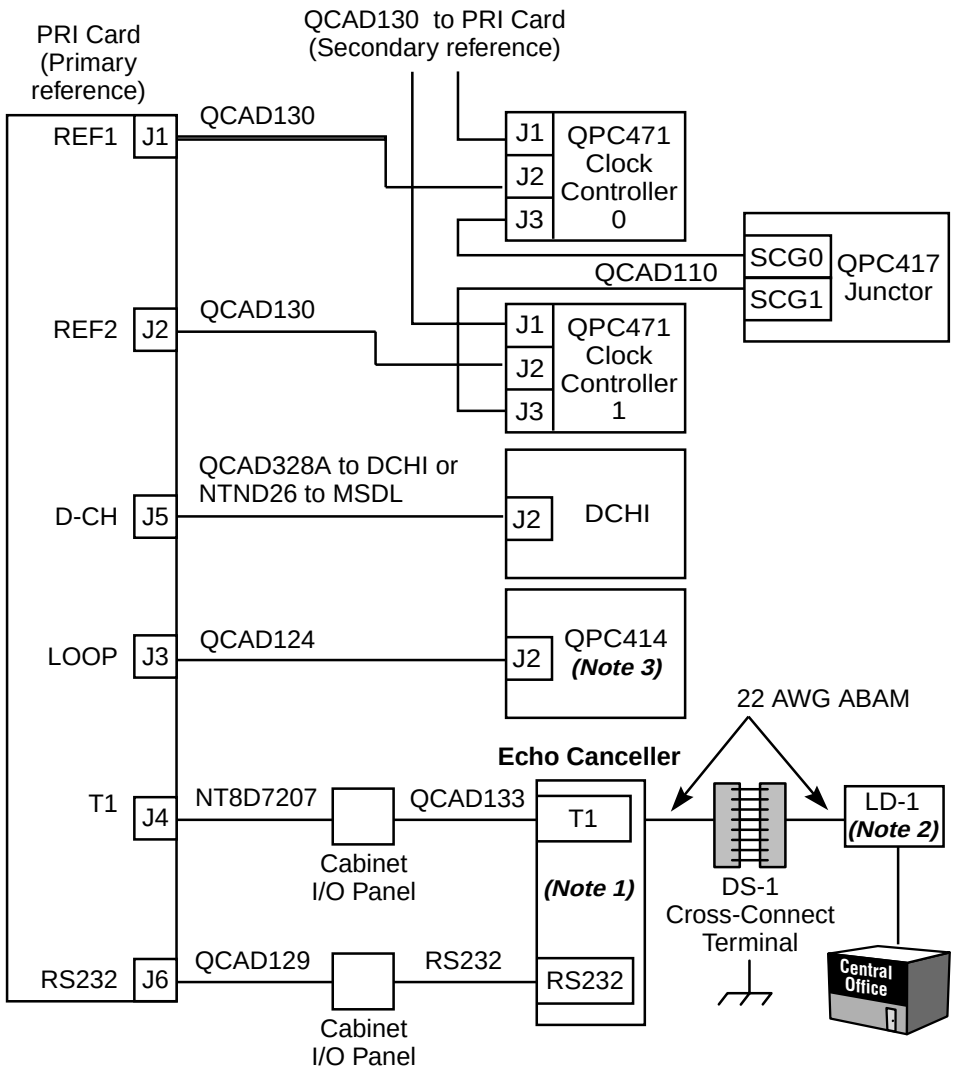


***Note 1:*** Maximum cable distance from PRI card to DS-1 cross connect is 200 m (655 ft).
***Note 2:*** Maximum cable distance from PRI card to LD-1 is 229 m (750 ft).
***Note 3:*** QPC720 does not interface with NT8D04 Superloop Network Card.

553-7367

**Figure 57**
**Half group cabling without echo canceller, for the QPC720 on Options 51C and 61C**

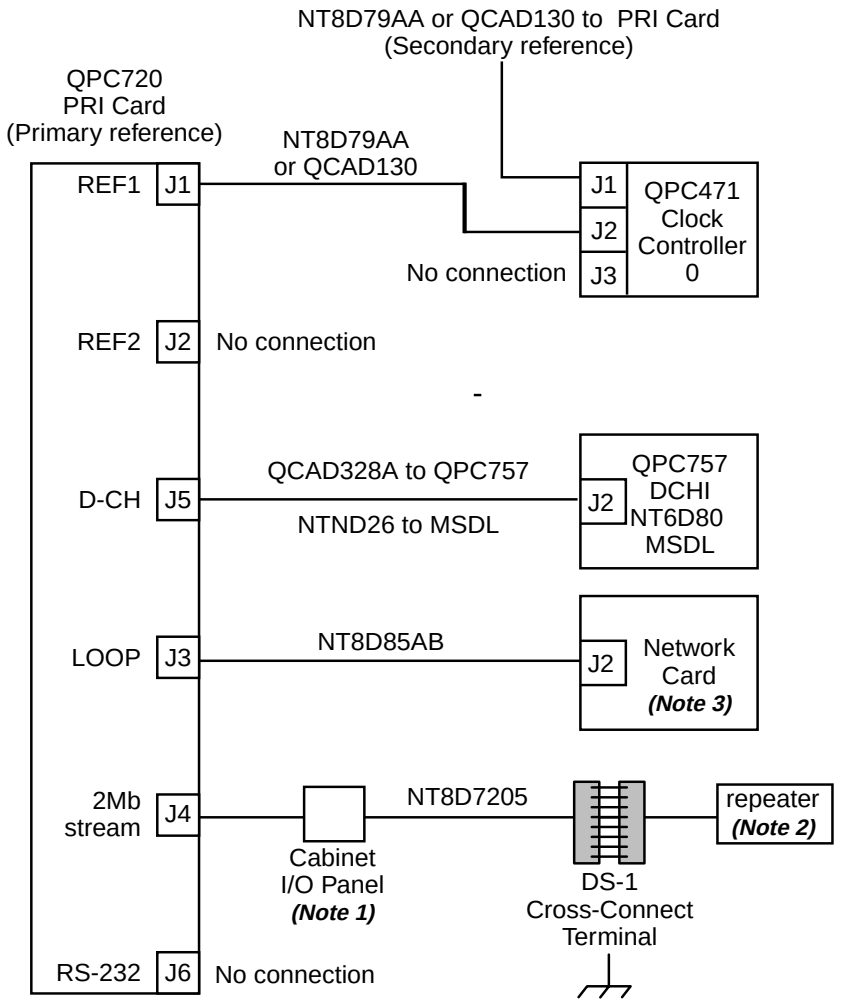


***Note 1:*** Maximum cable distance from PRI card to cross connect is 200 m (655 ft) .
***Note 2:*** Maximum cable distance from PRI card to repeater is 229 m (750 ft).
***Note 3:*** QPC720 does not interface with NT8D04 Superloop Network Card.

553-1389.1

**Figure 58**
**Half group cabling with echo canceller, for the QPC720 on Options 51C and 61C**

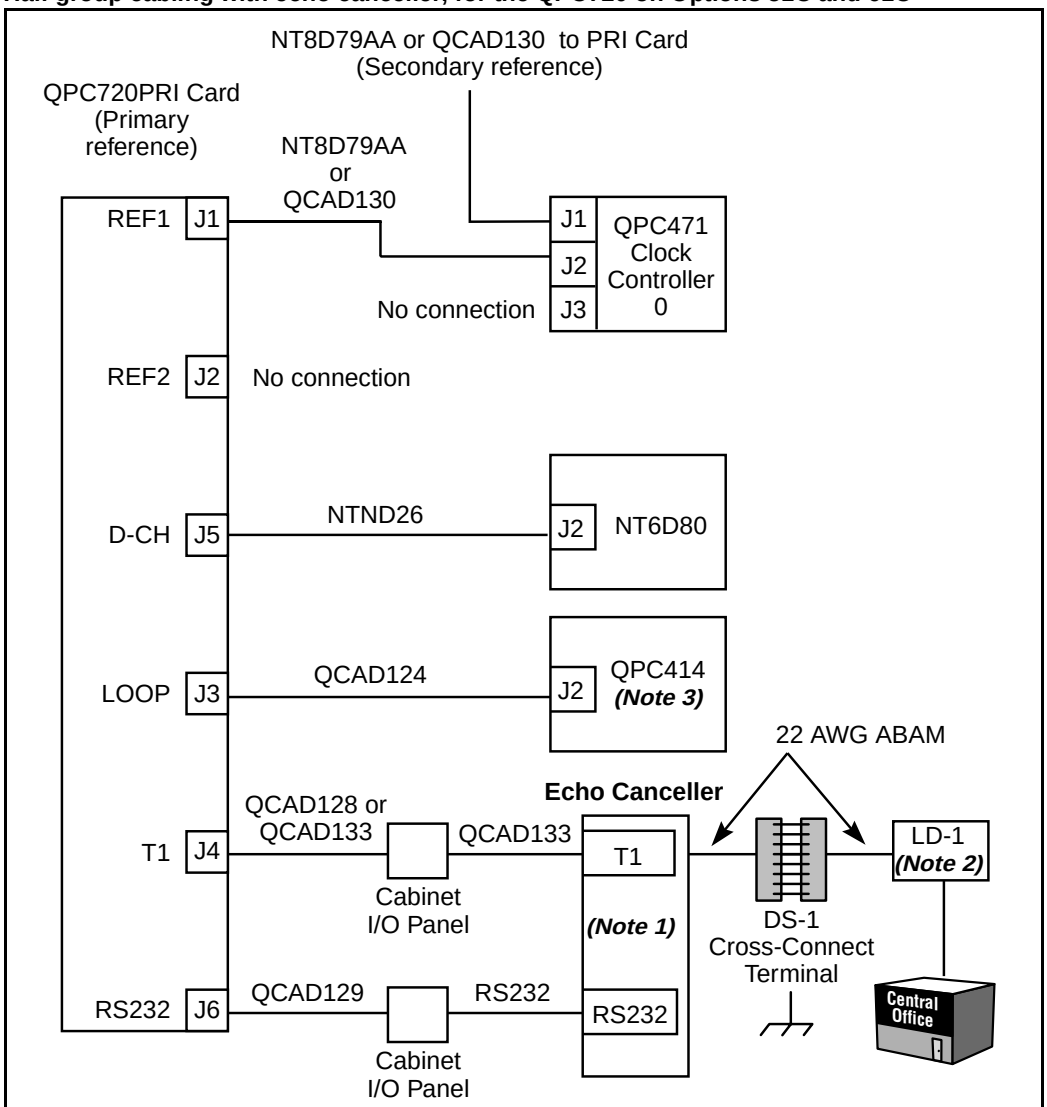


***Note 1:*** Maximum cable distance from PRI card to DS-1 cross connect is 200 m (655 ft).
***Note 2:*** Maximum cable distance from PRI card to LD-1 is 229 m (750 ft).
***Note 3:*** QPC720 does not interface with NT8D04 Superloop Network Card.

553-1390.1

**Figure 59**
**Single group cabling without echo canceller, for the QPC720 on Options 51C and 61C**

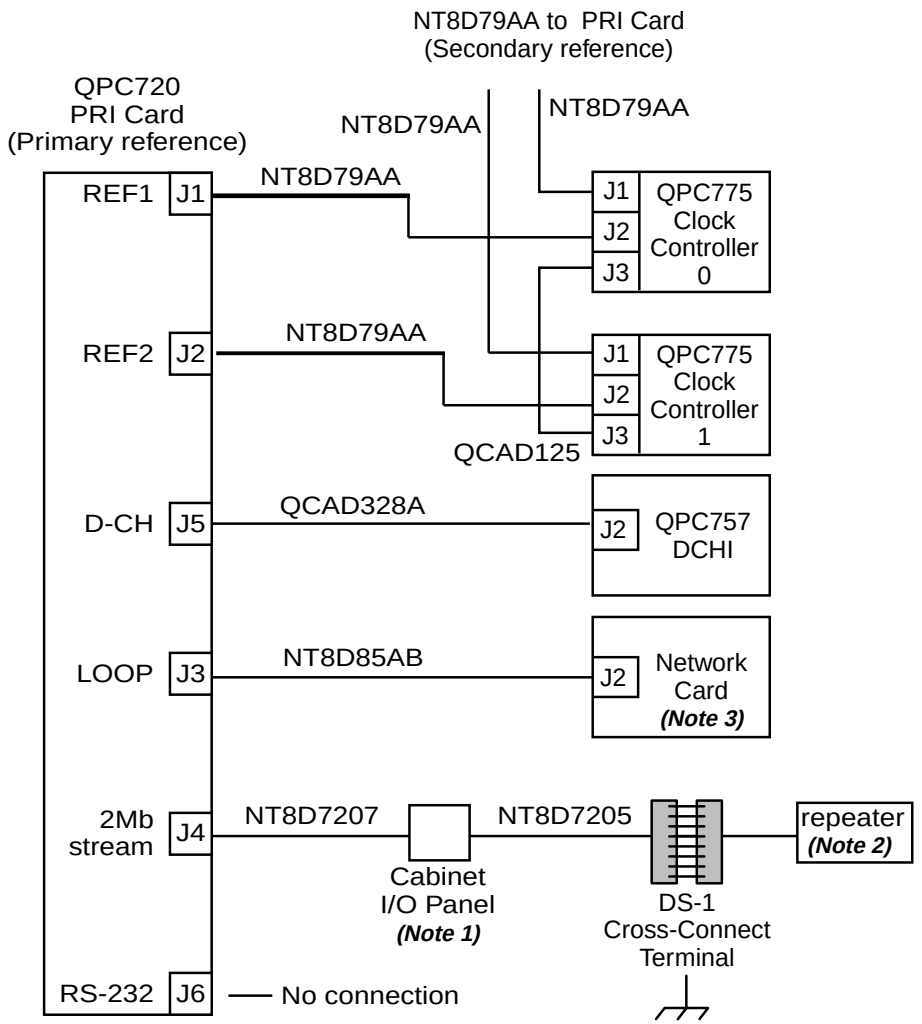


***Note 1:*** Maximum cable distance from PRI card to cross connect is 200 m (655 ft) .
***Note 2:*** Maximum cable distance from PRI card to repeater is 229 m (750 ft).
***Note 3:*** QPC720 does not interface with NT8D04 Superloop Network Card.

553-1391.1

**Figure 60**
**Single group cabling with echo canceller, for the QPC720 on Options 51C and 61C**

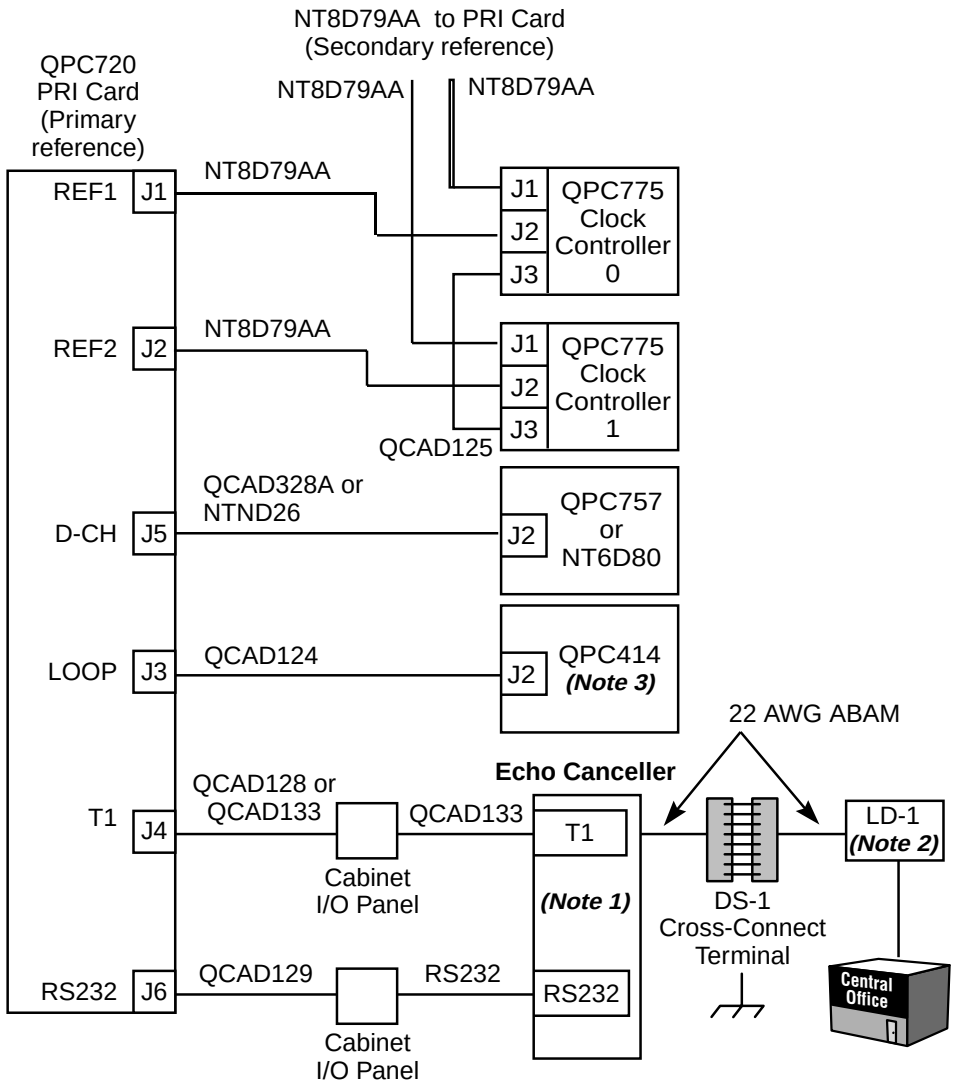


***Note 1:*** Maximum cable distance from PRI card to DS-1 cross connect is 200 m (655 ft).
***Note 2:*** Maximum cable distance from PRI card to LD-1 is 229 m (750 ft).
***Note 3:*** QPC720 does not interface with NT8D04 Superloop Network Card.

553-1392

**Figure 61**
**Option 81C cabling for the QPC720 without echo canceller**

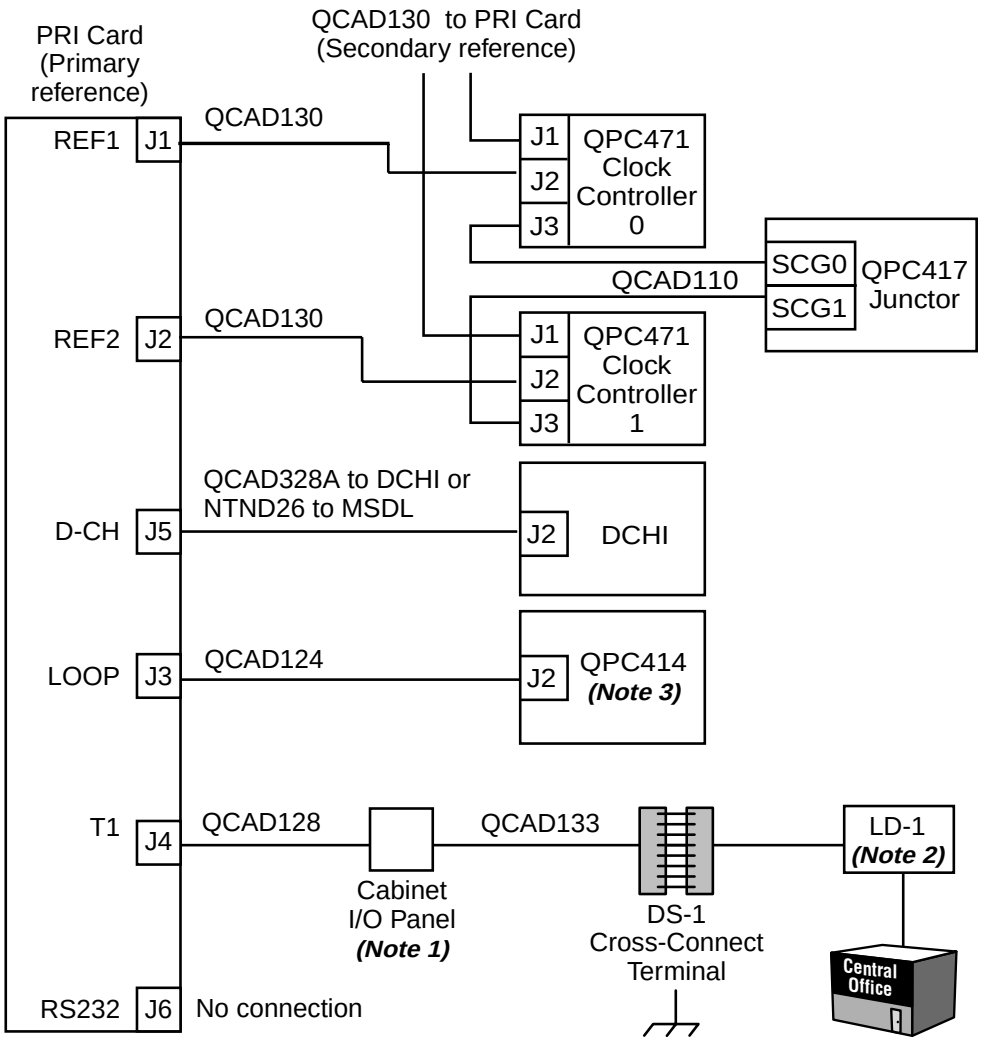


***Note 1:*** Maximum cable distance from PRI card to DS-1 cross connect is 200 m (655 ft).
***Note 2:*** Maximum cable distance from PRI card to LD-1 is 229 m (750 ft).
***Note 3:*** QPC720 does not interface with NT8D04 Superloop Network Card.

553-7366.1

**Figure 62**
**Option 81C cabling for the QPC720 with echo canceller**

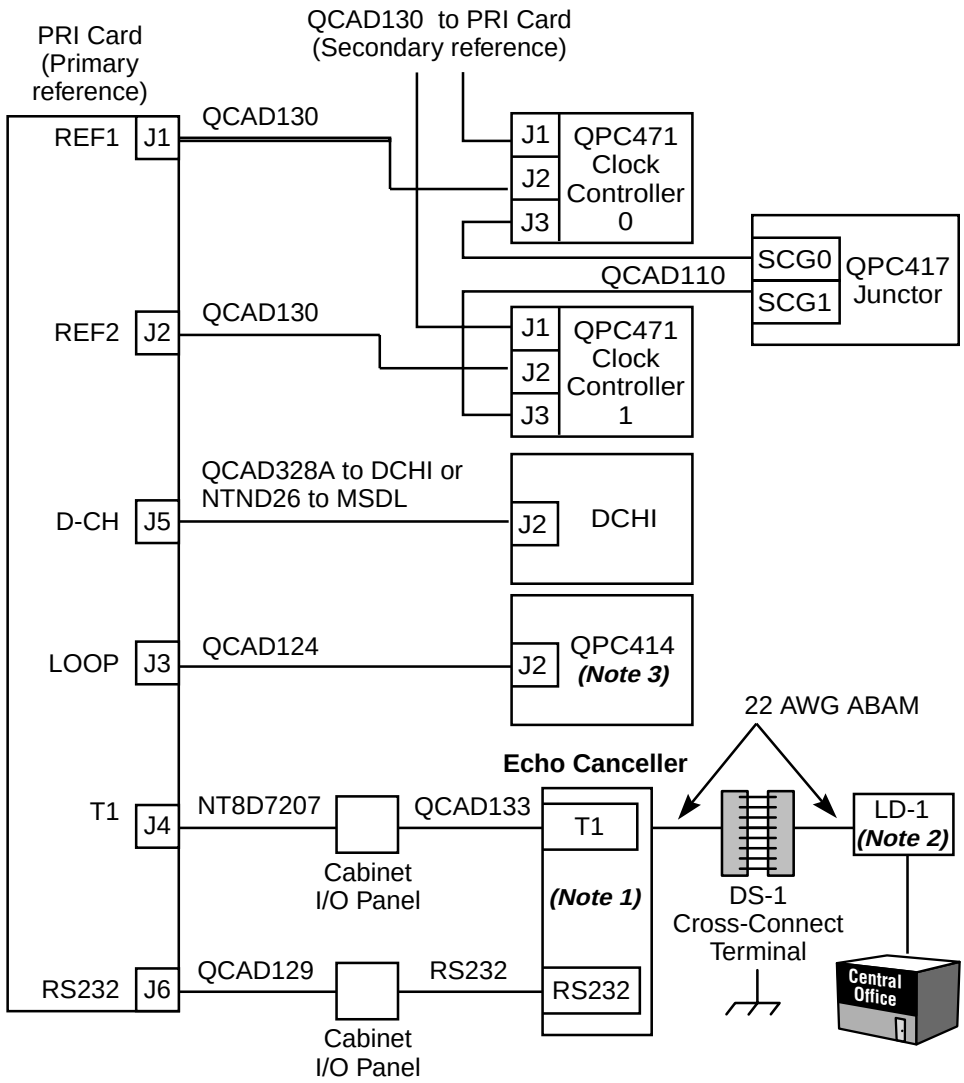


***Note 1:*** Maximum cable distance from PRI card to DS-1 cross connect is 200 m (655 ft).
***Note 2:*** Maximum cable distance from PRI card to LD-1 is 229 m (750 ft).
***Note 3:*** QPC720 does not interface with NT8D04 Superloop Network Card.

553-7367.1

**Table 33**
**Cable for the NT8D72 PRI card on Options 51C and 61C**

| Cable | From | Des | Con | To | Des | Con | To |
|---|---|---|---|---|---|---|---|
| NTND26 | PRI card | | J5 | MSDL | | | |
| NT8D79AA | PRI card | | J1 | Clock controller | CC-0 | J2 | Only when primary clock source. |
| NT8D79AA | PRI card | | J1 | Clock controller | CC-0 | J1 | Only when secondary clock source. |
| **For single-group only** | | | | | | | |
| NT8D79AA | PRI card | | J2 | Clock controller | CC-1 | J2 | Only when primary clock source. |
| NT8D79AA | PRI card | | J2 | Clock controller | CC-1 | J1 | Only when secondary clock source. |
| QCAD125 | Clock controller | CC-0 | J3 | Clock controller | CC-1 | J3 | Clock Controller back-up. |
| NT8D85AB | PRI card | | J3 | Network | | | Run directly to Network pack. |
| QCAD328A | PRI card | | J2 | DCHI | | J2 | Run directly to DCHI card. |
| NTND26 | PRI card | | J5 | MSDL | | | |
| NT8D7207 | PRI card | | J4 | I/O Panel | | | |
| RS-232 | I/O Panel | | | Echo canceller | | | |
| RS-232 | PRI card | | J6 | Echo canceller | | | |
| NT8D7205 | I/O Panel | | | cross connect | | | Run via cabinet I/O panel to cross-connect terminal from switch. |

***Note:*** No additional cabling is required for multiple PRIs. The D-channel is associated through software in Overlay 17 (prompt PRI).

**Table 34**
**Cable for the NT8D72 PRI card on Option 81C (Part 1 of 2)**

| Cable | From | Des. | Con. | To | Des. | Con. | Notes |
|---|---|---|---|---|---|---|---|
| QCAD130 | PRI card | | | J1 | Clock controller | CC-0 | 1 |
| QCAD130 | PRI card | | | J1 | Clock controller | CC-0 | 2 |
| QCAD130 | PRI card | | | J2 | Clock controller | CC-1 | 1 |
| QCAD130 | PRI card | | | J2 | Clock controller | CC-1 | 2 |
| QCAD110 | Clock controller | CC-0 | J3 | Junctor board | JCTR | J11 | 3 |
| QCAD110 | Clock controller | CC-1 | J3 | Junctor board | JCTR | J12 | |
| QCAD124 | PRI card | | J3 | Network | | | 4 |
| QCAD328A | PRI card | | J5 | DCHI card | | J2 | 5 |
| NTND26 | PRI card | J5 | | MSDL | | | |
| QCAD128 | PRI card | | J4 | I/O Panel | | | 6 |
| QCAD133 | I/O Panel | | | Patch Panel | | | 6 |
| QCAD129 | PRI card | | J6 | I/O Panel | | | 6 |
| RS-232 | I/O Panel | | | Echo Canceller | | | |
| RS-232 | PRI card | | J6 | Echo Canceller | | | 7 |
| QCAD133 | PRI card | | J4 | Patch Panel | | | 7 |
| RS-232 | PRI card | | J6 | Echo Canceller | | | 7 |

**Table 34**
**Cable for the NT8D72 PRI card on Option 81C (Part 2 of 2)**

***Note 1:*** Only when primary clock source.

***Note 2:*** Only when secondary clock source.

***Note 3:*** Multi-group junctor board connection.

***Note 4:*** Run to connector on network pack.

***Note 5:*** Run directly to DCHI card.

***Note 6:*** Run by means of cabinet I/O panel to CSU, echo canceller, or cross connect terminal.

***Note 7:*** Run by means of cabinet I/O panel to cross-connect terminal or echo canceller from non shielded system.

***Note 8:*** No additional cabling is required for multiple PRIs. The D-channel is associated through software in LD17, prompt PRI.

**Table 35**
**Cable for the QPC720 PRI card on Options 51C and 61C (Part 1 of 2)**

| Cable | From | Des. | Con. | To | Des. | Con. | Comments |
|---|---|---|---|---|---|---|---|
| **For half group only** | | | | | | | |
| QCAD130 NT8D79xx | QPC720 | | J1 | QPC471/ QPC775 | CC-0 | J2 | Only when primary clock source. |
| QCAD130 NT8D79xx | QPC720 | | J1 | QPC471/ QPC775 | CC-0 | J1 | Only when secondary clock source. |
| NTND26 | QPC720 | | J5 | NT6D80 | | | |
| **For single group only** | | | | | | | |
| QCAD130 NT8D79xx | QPC720 | | J2 | QPC471/ QPC775 | CC-1 | J2 | Only when primary clock source. |
| QCAD130 NT8D79xx | QPC720 | | J2 | QPC471/ QPC775 | CC-1 | J1 | Only when secondary clock source. |
| QCAD125 NT8D75xx | QPC471/ QPC775 | CC-0 | J3 | QPC471/ QPC775 | CC-1 | J3 | Clock controller back-up. |
| QCAD124 NT8D85xx | QPC720 | | J3 | Network | | | Run directly to network card. |

**Table 35**
**Cable for the QPC720 PRI card on Options 51C and 61C (Part 2 of 2)**

| Cable | From | Des. | Con. | To | Des. | Con. | Comments |
|---|---|---|---|---|---|---|---|
| QCAD328A | QPC720 | | J5 | QPC757 | | J2 | Run directly to DCHI card. |
| NTND26 | QPC720 | | J5 | NT6D80 | | | |
| QCAD133 | I/O Panel | | | Patch panel | | | Run via cabinet I/O panel to CSU, Echo Canceller, or cross-connect terminal. |
| QCAD129 | QPC720 | | J6 | I/O Panel | | | |
| RS-232 | I/O Panel | | | Echo Canceller | | | |
| RS-232 | QPC720 | | J6 | Echo Canceller | | | |
| QCAD133 NT8D83xx | QPC720 | | J4 | Patch panel | | | Run via cabinet I/O panel to cross-connect terminal or Echo Canceller from non-shielded system. |

**Table 36**
**Cable for the QPC720 PRI card on Option 81C (Part 1 of 3)**

| Cable | From | Des. | Con. | To | Des. | Con. | Notes |
|---|---|---|---|---|---|---|---|
| QCAD130 NT8D79xx | QPC720 | | | J1 | QPC471 QCP775 | CC-0 | Only when primary clock source |
| QCAD130 NT8D79xx | QPC720 | | | J1 | QPC471 QCP775 | CC-0 | Only when secondary clock source |

**Table 36**
**Cable for the QPC720 PRI card on Option 81C (Part 2 of 3)**

| Cable | From | Des. | Con. | To | Des. | Con. | Notes |
|---|---|---|---|---|---|---|---|
| QCAD130 NT8D79xx | QPC720 | | | J2 | QPC471 QCP775 | CC-1 | Only when primary clock source |
| QCAD130 NT8D79xx | QPC720 | | | J2 | QPC471 QCP775 | CC-1 | Only when secondary clock source |
| QCAD110 NT8D74xx | QPC471 QCP775 | CC-0 | J3 | QPC417 | JCTR | J11 | Multi-group junctor board connection |
| QCAD110 NT8D74xx | QPC471 QCP775 | CC-1 | J3 | QPC417 | JCTR | J12 | |
| QCAD124 NT8D85xx | QPC720 | | J3 | Network | | | Run to connector on network pack |
| QCAD328 | QPC720 | | J5 | QPC757 | | J2 | Run directly to DCHI card |
| NTND26 | QPC720 | | J5 | NT6D80 | | | |
| QCAD128 NT8D83xx | QPC720 | | J4 | I/O Panel | | | Run via cabinet I/O panel to CSU, Echo Canceller, or cross-connect terminal |
| QCAD133 NT8D83xx | I/O Panel | | | Patch Panel | | | Run via cabinet I/O panel to CSU, Echo Canceller, or cross-connect terminal |
| QCAD129 NT9J93xx | QPC720 | | J6 | I/O Panel | | | Run via cabinet I/O panel to CSU, Echo Canceller, or cross-connect terminal |
| RS-232 | I/O Panel | | | Echo Canceller | | | |

**Table 36**
**Cable for the QPC720 PRI card on Option 81C (Part 3 of 3)**

| Cable | From | Des. | Con. | To | Des. | Con. | Notes |
|---|---|---|---|---|---|---|---|
| RS-232 | QPC720 | | J6 | Echo Canceller | | | Run via cabinet I/O panel to Echo Canceller or cross-connect terminal from non-shielded system |
| QCAD133 NT8D83xx | QPC720 | | J4 | Patch Panel | | | Run via cabinet I/O panel to Echo Canceller or cross-connect terminal from non-shielded system |
| RS-232 | QPC720 | | J6 | Echo Canceller | | | Run via cabinet I/O panel to Echo Canceller or cross-connect terminal from non-shielded system |

## Switch settings

Figure 63 shows the NT8D72AA, NT8D72AB, and NT8D72BA PRI dip switch settings for Meridian 1 Options 51C, 61C, and 81C. Figure 64 shows the QPC720 PRI switch settings for Meridian 1 Options 51C, 61C, and 81C.

Table 37 indicates the Transmission equalization switch settings for the NT8D72 and QPC720 PRI cards for Meridian 1 Options 51C, 61C, and 81C.

**Figure 63**
**NT8D72AA, NT8D72AB, NT8D72BA PRI dip switch settings for Options 51C, 61C and 81C**

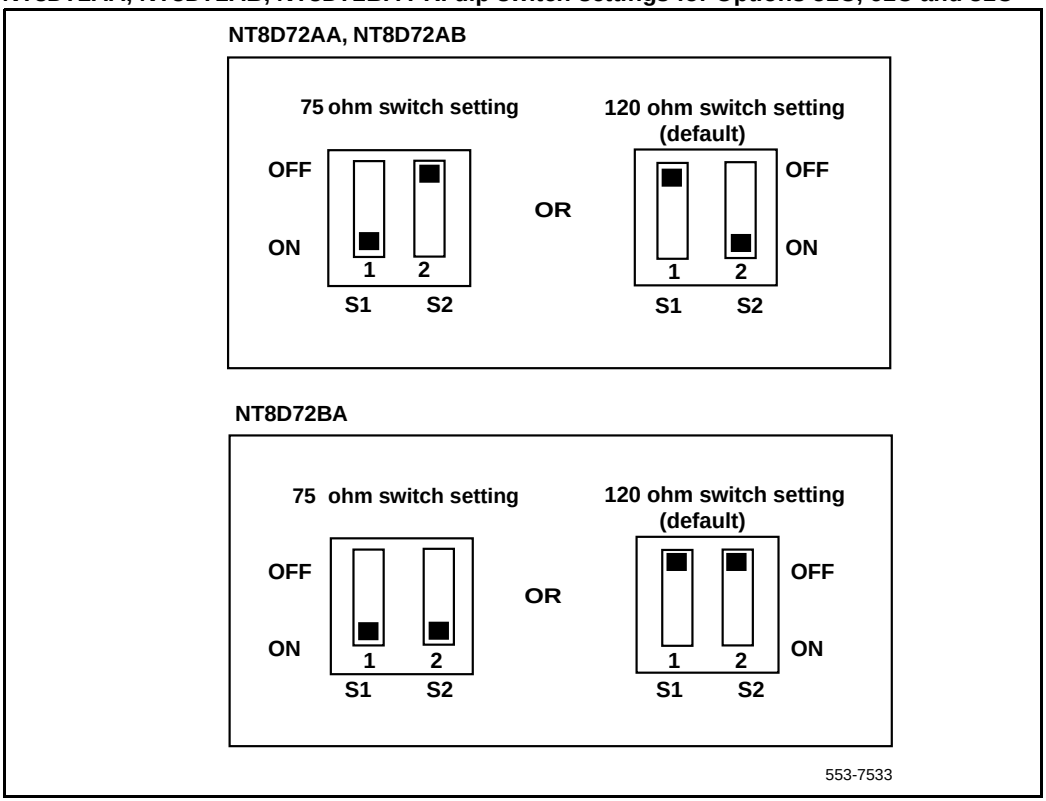


***Note:*** For EuroISDN applications, the default setting (120 ohms) should be used.

**Figure 64**
**QPC720 switch settings for Options 51C and 61C**

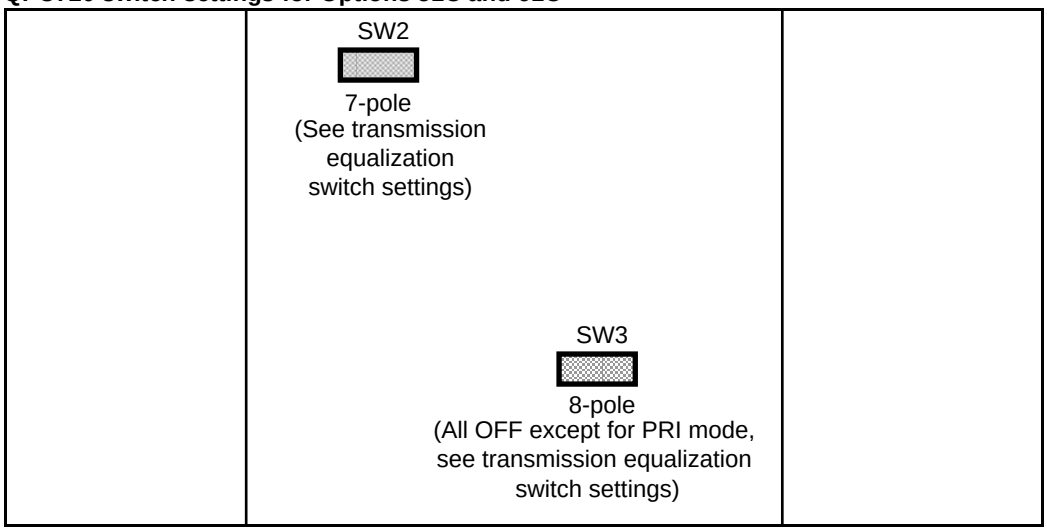


**Table 37**
**NT8D72 and QPC720 PRI transmission equalization switch settings for Options 51C, 61C and 81C (Part 1 of 2)**

| Switch S2 settings | To repeater facility | To cross-connect point |
|---|---|---|
| 5 on | 0 - 45 m<br>(0 - 150 ft) | 0 - 30 m<br>(0 - 100 ft) |
| 2, 4, 6 on | 46 - 135 m<br>(151 - 450 ft) | 31 - 100 m<br>(101 - 355 ft) |
| 1, 3, 7 on | 136 - 225 m<br>(451 - 750 ft) | 101 - 200 m<br>(356 - 655 ft) |

**Table 37**
**NT8D72 and QPC720 PRI transmission equalization switch settings for Options 51C, 61C and 81C (Part 2 of 2)**

| Switch 3 options for PRI with ESF | |
|---|---|
| SW3-1 | on = extended superframe format (ESF)<br>off = superframe format (SF) |

***Note 1:*** All positions on S2 (location B22) are OFF except as shown under the column labeled "Switch S2 settings." The 8-pole SW3 (location E37) positions are OFF except for SW3-1 as shown for "Switch 3 option for DTI with ESF."

***Note 2:*** For D2, D3, or D4 framing formats (superframe formats), set all SW3 options to OFF.

***Note 3:*** For the DTI with ESF option, you must set the framing format as ESF with the DLOP prompt in LD17 before you set SW3-1 on the card.

# Install NT8D72 and QPC720 PRI cards on Options 51C, 61C and 81C

## Task summary list

The following is a summary of the tasks in this section:

**1** Install the NT8D72 and QPC720 PRI on Options 51C, 61C, and 81C

Use Procedure 13 to install the NT8D72 and QPC720 PRI cards on Meridian 1 Options 51C, 61C, and 81C.

**Procedure 13**
**Install the NT8D72 and QPC720 PRI on Options 51C, 61C, and 81C**

**1** Determine the cabinet and shelf location of the circuit card to be installed. The following slots can be used if they are not required for other cards.

**Table 38**
**Shelf and slot location of NT8D72 and QPC720 on Options 51C and 61C**

| System | Shelf | Slot |
|---|---|---|
| 51C, 61C | NT6D39 CPU/NET | 3–8 Note 1<br>18 Note 3 |
| | NT8D35 DTI Exp Cube | 2–3 Note 1<br>5–14 Note 1 |
| | NT8D47 RPE Cube | 1, 11, 12 |
| 81C | Core | 0-3 |
| | Network Module | 5–10, 13–14 |
| | RPE | 1, 11, 12 |

***Note 1:*** DTI/PRI packs require two slots. The slot indicated is the maximum slot that the pack resides in. For example, the slot 14 pack uses slots 13 and 14.

***Note 2:*** The DTI/PRI pack cannot be installed in slot 11. The pack would come in contact with the BTU installed between slots 11 and 12.

***Note 3:*** Slot 18 is only available on CPU shelf, which has no MDU/FDU.

***Note 4:*** DTI/PRI pack could reside in slots 10 and 11, but cannot reside in slots 11 and 12 because of powering restrictions.

**2** Unpack and inspect the PRI cards.

**3** Set option switches on the PRI circuit cards.

**4** Install PRI circuit card in the assigned shelf and slot.

**5** Install network circuit card (if no network loop connection is available).

**6** If required, install I/O adapters in I/O panel.

**7** Run and connect the PRI cables.

**8** If required, install connecting blocks at MDF or wall-mounted cross-connect terminal.

**9** If required, designate connecting blocks at MDF or wall-mounted cross-connect terminal.

**10** If required, install CSU or Echo Canceller.

**11** Cross-connect PRI circuits.

**12** Add related office data into system memory. Refer to the work order.

**13** Run PRI verification tests.

# Remove NT8D72 and QPC720 PRI cards from Options 51C, 61C, and 81C

## Task summary list

The following is a summary of the tasks in this section:

**1** Remove the NT8D72 QPC720 PRI from Options 51C, 61C and 81C

Use Procedure 14 to remove the NT8D72 and QPC720 PRI cards from Meridian 1 Options 51C, 61C, and 81C.

**Procedure 14**
**Remove the NT8D72 QPC720 PRI from Options 51C, 61C and 81C**

**1** Disable the D-channel in LD 96.

**2** Disable Network Loop using LD 60. The command is DISL x.

**3** If the circuit card is being completely removed, not replaced, remove data from memory.

**4** Determine the location of the circuit cards to be removed.

**5** Remove cross connections at MDF to wall-mounted cross-connect terminal.

**6** Disconnect PRI cables at Echo Canceller and at carrier interface (for example, Office Repeater and NCTE equipment).

**7** Tag and disconnect cables from card. Rearrange Clock Controller card cables if required. This will affect call processing on DTI/PRI loops.

**8** Remove PRI and network circuit cards. If the other circuit of a dual network card is in use, DO NOT remove the network card.

**9** Pack and store circuit card.

# Install an additional network shelf

## Task summary list

The following is a summary of the tasks in this section:

**1** Install an additional network shelf on Option 51C and 61C

Use Procedure 15 to install an additional network shelf, when additional shelf space is required for PRI cards on Meridian 1 Options 51C and 61C. A QUD15 cooling unit is required for each additional shelf installed.

**CAUTION**
Do not place the circuit packs in the shelf until Step 7 is completed.

**Procedure 15**
**Install an additional network shelf on Option 51C and 61C**

**1** Determine the cabinet and shelf location of the Network shelf to be installed.

**2** Unpack and inspect the shelf.

**3** Remove the existing left or right rear Peripheral Equipment (PE) shelf (if required).

**4** Install the additional Network shelf in the PE (Step 3) location.

**5** Install a QUD15 cooling unit directly below the Network shelf and secure with four mounting screws.

**6** Install and connect the QCAD172A power cable to the added QUD15 cooling unit as follows:

— If the added QUD15 is located below the left Network shelf, unplug the C11 connector from the QCAD111 power harness that connects to the existing left side QUD15.

— If the added QUD15 is located below the right Network shelf, unplug the C21 connector from the QCAD111 power harness instead of the C11.

- Plug the C11 or C21 connector into the single-ended connector of the QCAD172A power cable.
- Plug one of the two connectors at the other end of the C11 or C21 connector that was removed.
- Plug the remaining connector of the QCAD172A power cable into the added QUD15.

**7** At the QCAD111 power wiring harness, untie and then connect:

— the C17 power connection cable to the ***right*** rear Network shelf

— the C19 power connection cable to the ***left*** rear Network shelf

**8** Install PRI trunks and enter related shelf and PRI office data into switch memory.

# NTCK43 Dual-port PRI2 installation and removal

## Contents

The following are the topics in this section:



## Reference list

The following are the references in this section:

- *X11 Networking Features and Services* (553-2901-301)
- *ISDN PRI: Maintenance* (553-2901-501)

## Introduction

This section contains information required to install the NTCK43 DPRI on Meridian 1 system options 51C, 61C, 71, and 81C.

For installation and removal procedures pertaining to the NTBK51AA Downloadable D-channel daughterboard, refer to the section “NTBK51 DDCH installation and removal” on page 127.

# Setting up the NTCK43

## NTCK43 circuit pack locations

Each NTCK43 DPRI circuit pack requires 1 slot on a shelf. DPRI packs can be placed in any network slot.

## NTCK43 switch settings

Figure 65 depicts the NTCK43 DPRI switch settings.

**Figure 65**
**NTCK43 switch settings**

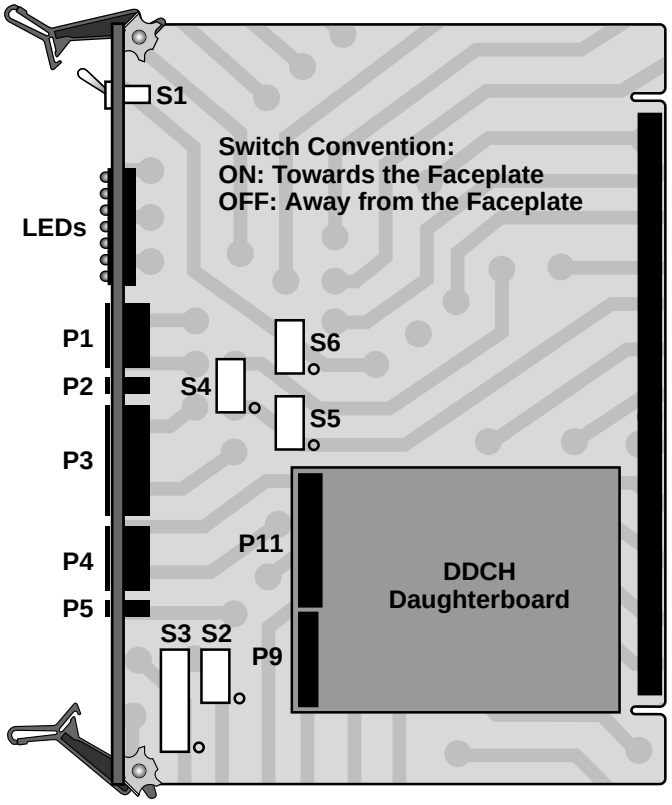

The NTCK43 DPRI pack has 6 switches, namely S1 to S6. These control the following functions:

### S1: Faceplate Switch

S1 is the Faceplate Switch and corresponds to the ENET enable switch. Refer to Table 39.

**Table 39**
**Faceplate switch setting - S1**

| Switch | UP | DOWN |
|---|---|---|
| S1 | Dual PRI Enabled | Dual PRI Disabled |

### S2: Clock Controller Functions

***Note:*** Switches S2 to S6 follow the convention for ON/OFF as follows:

ON is Towards the Faceplate.

OFF is Away from Faceplate.

Four options are available. Table S2 gives a summary of the switch settings.

***Note:*** S2(3-4) are not presently used.

**Table 40**
**Clock Controller settings - S2**

| S2-1 | S2-2 | Clock Options |
|---|---|---|
| OFF | OFF | Option 1 |
| OFF | ON | Option 2 |
| ON | OFF | Option 3 |
| ON | ON | Option 4 |

### S3: On-board DDCH address switch

This switch sets the address of the DDCH daughterboard only. It does not set the address of external D-channel handlers which are used with the Dual PRI. If external D-channel handlers are used then their address is set on the external DCHI card itself.

This address corresponds to the DNUM (0-15) that is assigned to Unit 0 of the DDCH during configuration. As a DDCH has 2 D Channels it is half the capacity of the MSDL but then it does not take up a cardslot. Address 0 is not normally assigned to the DDCH as it is commonly assigned to the System Terminal TTY0.

The DDCH Address (0-15) is set on S3 lower 8 switch positions, S3 (1-8) in Binary format, i.e. S3-1 is the Least Significant Bit. S3 positions 5-8 will be always ON (towards the faceplate). DDCH address can be in the range binary 0000 (Zero) to 1111 (Fifteen).

If the DDCH is not installed then the address set on the S3 switch does not matter. However if the DDCH is installed but not used then the address set on S3 should not conflict with any other DCHI address.

> ***Note:*** S3 (9-10) are not used and are spare.
>
> ***Note:*** The DDCH Address is set by setting the relevant positions of S3 to OFF.

Example 1: Setting up an address (DNUM) of "15" for the DDCH requires switch S3 positions 1, 2, 3 & 4 away from the Faceplate (OFF) and setting S3 positions 5-8 towards the Faceplate (ON).

Example 2: Setting up an address (DNUM) of "9" for the DDCH requires switch S3 positions 1 & 4 away from the Faceplate (OFF) and setting S3 positions 2,3, 5-8 towards the Faceplate (ON).

Table 41 gives a summary of the S3 on-board switch functions.

**Table 41**
**Summary of on-board DDCH switch functions - S3**

| Switch | ON | OFF |
|---|---|---|
| S3-(1-8) | - | DDCH address |
| S3-9 | Spare | Spare |
| S3-10 | Spare | Spare |

***Note:*** S7 is not used with the DDCH daughter board (NTBK51) so all S7 switches should be set to “OFF” deactivating address matching in NT addressing mode.

### S3 AND S7: On-board NTAG54 address switch settings

These switches reside on the NTAG54AA daughterboard, used for DASS2/DPNSS1 applications.

### S4: Tx/Rx grounding options

Switch S4 provides the option to connect Frame Ground (FGND) to the carrier cable shield of the receive and / or transmit pair. This option is used in Some 75 Ohm applications. Table 42 gives a summary of the switch settings.

For 120 Ohm applications S4 (1-4) are set to OFF.

**Table 42**
**Summary of on-board DDCH switch functions - S3**

| Switch | ON | OFF |
|---|---|---|
| | (Switch closed) | (Switch open) |
| S4-1 | PRI 0 Rx Shield Grounded | PRI 0 Rx Shield Open |
| S4-2 | PRI 0 Tx Shield Grounded | PRI 0 Tx Shield Open |
| S4-3 | PRI 1 Rx Shield Grounded | PRI 1 Rx Shield Open |
| S4-4 | PRI 1 Tx Shield Grounded | PRI 1 Tx Shield Open |

### S5-6: Impedance matching

CCITT recommendations provide options for the use of either 75 Ohm coaxial or 120 Ohm twisted pair cable. Both of these impedances are provided by the line interface. The impedance is switch selectable. Table 43 gives a summary of the switch settings.

**Table 43**
**Summary of on-board DDCH switch functions - S3**

| Switch | ON | OFF |
|---|---|---|
| S6 (PRI unit 0) | 75 ohm | 120 ohm |
| S5 (PRI unit 1) | 75 ohm | 120 ohm |

# Install the NTCK43 DPR

**CAUTION**

The static discharge bracelet located inside the cabinet must be worn before handling circuit cards. Failure to wear the bracelet can result in damage to the circuit cards.

**1** Determine the cabinet and shelf location where the Dual PRI is to be installed. The Dual PRI can be installed in any Network slot.

**2** Unpack and inspect circuit packs.

**3** Set the option switches on the DPRI circuit pack before installation. Refer to “NTCK43 switch settings” on page 170.

S1 (faceplate switch) must be OFF when installing the Dual PRI otherwise an M1 Initialize may occur. S1 on the Dual PRI corresponds to the faceplate switch on the QPC414 Network pack.

**4** Install DPRI circuit pack in the assigned shelf and slot.

The faceplate LEDs should flash 3 times.

Enable faceplate switch S1. This is the "Loop Enable" switch.

**5** If required, install I/O adapters in I/O panel.

**6** Run and connect the DPRI cables (refer to the 'Cabling requirements' section if required).

**7** If required, install connecting blocks at MDF or wall mounted cross-connect terminal.

**8** If required, designate connecting blocks at MDF or wall mounted cross-connect terminal.

**9** If required, install Network Channel Terminating Equipment (NCTE).

**10** Run PRI Verification Test.

**11** Add related office data into switch memory. Refer to the work order and *X11 Networking Features and Services* (553-2901-301).

**12** Run PRI status check. Refer to *ISDN PRI: Maintenance* (553-2901-501) for the PRI verification tests, DPRI self-test, PRI status check, and PRI start-up test.

# NT5D97 Dual-port DTI2/PRI2 installation and removal

## Contents

The following are the topics in this section:



## Introduction

This section contains information required to install the NT5D97 Dual-port DTI2/PRI2 (DDP2) card on Meridian 1 options 51C, 61C, and 81C.

For installation and removal procedures for the NTBK51AA Downloadable D-channel daughterboard, prefer to the section “NTBK51 DDCH installation and removal” on page 127.

## NT5D97 circuit card locations

Each NT5D97 card requires one slot on a shelf. NT5D97 cards can be placed in any card slot in the network bus.

## Port definitions

Since the NT5D97 card is dual-card, it equips two ports; these ports may be defined in the following combinations:

| Port 0 | Port 1 |
|---|---|
| DTI2 | DTI2 |
| Not configured | DTI2 |
| DTI2 | Not configured |
| PRI2 | PRI2 |
| Not configured | PRI2 |
| PRI2 | Not configured |
| DTI2 | PRI2 |
| PRI2 | DTI2 |

## Replacement of a digital trunk (NT8D72BA/QPC536E) by a DDP2 card, case scenarios

The following discussion describes possible scenarios when replacing a digital trunk NT8D72BA PRI2 card or QPC536E DTI2 card configuration with a NT5D97 DDP2 card configuration.

**Case 1** - The two ports of a QPC414 network card are connected to two digital trunks.

In this case, the QPC414 and the two digital trunks are replaced by a single DDP2 card, which is plugged into the network shelf in the QPC414 slot.

**Case 2** - One port of the QPC414 card is connected to a digital trunk, and the second is connected to a peripheral buffer. Both cards are in network loop location.

In this case, the QPC414 should not be removed. The digital trunk is removed and the DDP2 card is plugged into one of the two empty slots.

**Case 3** - The network shelf is full, one port of a QPC414 network card is connected to a digital trunk, and the second is connected to a peripheral buffer. This arrangement is repeated for another QPC414. The digital trunks are located in a shelf that provides only power.

In this case, the peripheral buffers will have to be re-assigned, so that each pair of buffers will use both ports of the same QPC414 card. The other QPC414 card may then be replaced by the NT5D97 DDP2.

**Note in all cases** - If an NT8D72BA card is being replaced by a DDP2 card, the D-channel Handler or MSDL may be either reconnected to the DDP2 card, or removed if an onboard NTBK51AA DDCH card is used.

## NT5D97 switch settings

The the NT5D97 DDP2 card is equipped with 6x2 sets of DIP switches for trunk parameters settings for port0 and port1 respectively. Additionally, the DDP2 card is equipped with one set of four DIP switches for the Ring Ground setting and one set of eight DIP switches for the D-channel Handler parameters setting.

The DIP switches are used for setting of default values of certain parameters. The general purpose switches are read by the firmware which sets the default values accordingly.

The parameters as shown in the tables that follow are set by the DIP switches. Factory setups are shown in bold.

> ***Note:*** There is no switch setting required to select between the on-board NTBK51AA D-channel daughterboard, and an external DCHI/MSDL. The NT5D97 automatically detects when the on-board NTBK51AA D-channel daughterboard is used.

# Trunk interface switches

## Impedance level and unit mode

The S9/S15 switch selects the impedance level and loop operation mode (DTI2 or PRI2). Refer to Table 44.

**Table 44**
**Impedance level and loop mode switch settings**

| Switch | Description | S9/S15 Switch Setting |
|---|---|---|
| 1 | Impedance level | **OFF - 120 ohm**<br>ON - 75 ohm |
| 2 | Spare | |
| 3 | Spare | |
| 4 | Unit mode | **OFF - loop operates in the DTI2 mode**<br>ON - loop operates in the PRI2 mode |

## Transmission mode

A per trunk switch (S4/S10) provides selection of the digital trunk interface type. Refer to Table 45.

***Note:*** This setup should not be changed.

**Table 45**
**Impedance level and loop mode switch settings**

| Description | S4/S10 Switch Setting |
|---|---|
| **E1** | **OFF** |
| Not used | |

## Line Build Out

A per trunk set of three switches (S5/S11, S6/S12, and S7/S13) provides the dB value for the line build out. Refer to Table 46.

***Note:*** This setup should not be changed.

**Table 46**
**Trunk interface line build out switch settings**

| Description | Switch Setting | | |
|---|---|---|---|
| | **S5/S11** | **S6/S12** | **S7/S13** |
| **0 dB** | **OFF** | **OFF** | **OFF** |

### Receiver Impedance

A per trunk set of four DIP switches (S8/S14) provides selection between 75 or 120 Ω values. Refer to Table 47.

**Table 47**
**Trunk interface receiver impedance switch settings**

| Description | S8/S14 Switch Setting | | | |
|---|---|---|---|---|
| 75 Ω | OFF | OFF | ON | OFF |
| 120 Ω | **OFF** | **OFF** | **OFF** | **ON** |

## Ring ground switches

A set of four DIP switches (S2) selects which Ring lines are connected to ground. Refer to Table 48.

**Table 48**
**Ring ground switch settings**

| Switch | Description | S2 Switch Setting |
|---|---|---|
| 1 | Trunk 0 Transmit | **OFF - Ring line is not grounded**<br>ON - Ring line is grounded |
| 2 | Trunk 0 Receive | **OFF - Ring line is not grounded**<br>ON - Ring line is grounded |
| 3 | Trunk 1 Transmit | **OFF - Ring line is not grounded**<br>ON - Ring line is grounded |
| 4 | Trunk 1 Receive | **OFF - Ring line is not grounded**<br>ON - Ring line is grounded |

## On board DDCH address select switches

In case of an on-board NTBK51AA D-channel daughterboard, set of four switches (S3) provide the daughterboard address. Refer to Table 49.

> ***Note:*** There is no switch setting required for switch 8 of S3 (S3-8) to select between the on-board NTBK51AA D-channel daughterboard, and an external DCHI/MSDL. The NT5D97 automatically detects when the on-board NTBK51AA D-channel daughterboard is used.

**Table 49**
**DCH mode and address select switch settings**

| Switch | Description | S3 Switch Setting |
|---|---|---|
| 1-4 | D-channel daughterboard Address | See Table 50 |
| 5-8 | For future use. | OFF |

Table 50 shows the possible selections of the NTBK51AA D-channel daughterboard address.

**Table 50**
**NTBK51AA daughterboard address select switch settings**

| **Device Address[1]** | **Switch Setting** | | | |
|---|---|---|---|---|
| 0[2] | OFF | OFF | OFF | OFF |
| 1 | **ON** | **OFF** | **OFF** | **OFF** |
| 2 | OFF | ON | OFF | OFF |
| 3 | ON | ON | OFF | OFF |
| 4 | OFF | OFF | ON | OFF |
| 5 | ON | OFF | ON | OFF |
| 6 | OFF | ON | ON | OFF |
| 7 | ON | ON | ON | OFF |
| 8 | OFF | OFF | OFF | ON |
| 9 | ON | OFF | OFF | ON |
| 10 | OFF | ON | OFF | ON |
| 11 | ON | ON | OFF | ON |
| 12 | OFF | OFF | ON | ON |
| 13 | ON | OFF | ON | ON |
| 14 | OFF | ON | ON | ON |
| 15 | ON | ON | ON | ON |

***Note 1:*** The maximum number of DCHI, MSDL, and DDCH devices in the system is 16.

The Device Addresses are equivalent to the MSDL DNUM designations.

***Note 2:*** Device address 0 is commonly assigned to the System TTY0 Monitor.

Refer to Figure 66 on page 184 and Figure 67 on page 185 for switch functional areas and default settings.

**Figure 66**
**Switch functional areas**

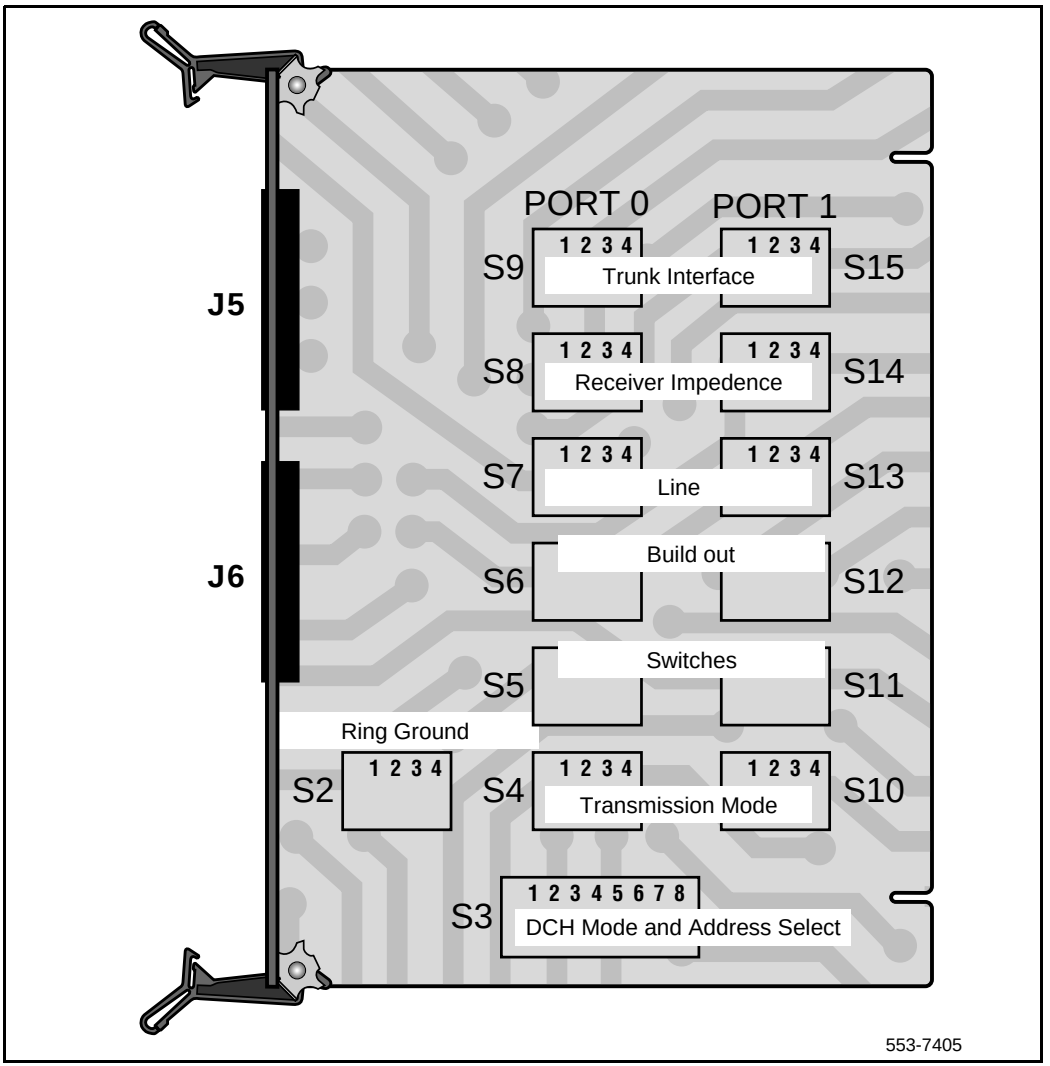

**Figure 67**
**Switch default settings**

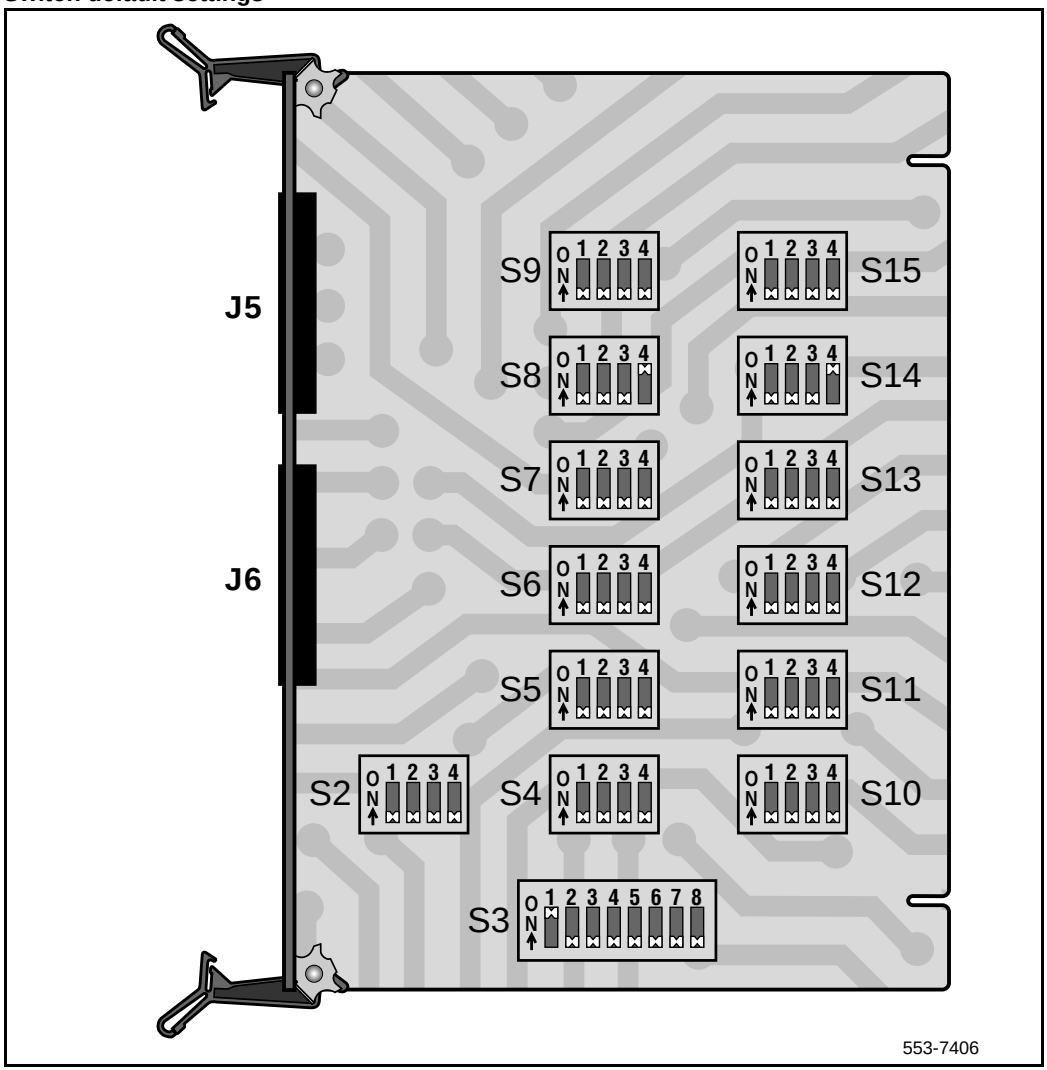

# Install the NT5D97 DDP2

## Task summary list

The following is a summary of the tasks in this section:

**1** Install the NT5D97 on 51C, 61C, 81C

Use Procedure 16 to install the NT5D97 on Meridian 1 options 51C, 61C, and option 81C.

**CAUTION**

The static discharge bracelet located inside the cabinet must be worn before handling circuit cards. Failure to wear the bracelet can result in damage to the circuit cards.

**Procedure 16**
**Install the NT5D97 on 51C, 61C, 81C**

**1** Determine the cabinet and shelf location where the NT5D97 is to be installed. The NT5D97 can be installed in any card slot in the Network bus.

**2** Unpack and inspect the NT5D97and cables.

**3** If a DDCH is to be installed, refer to the section “NTBK51 DDCH installation and removal” on page 127.

**4** Set the option switches on the NT5D97 card before installation. Refer to “NT5D97 switch settings” on page 179.

The ENB/DIS (enable/disable faceplate switch) must be OFF (DIS) when installing the NT5D97, otherwise a system initialize may occur. The ENB/DIS on the NT5D97 corresponds to the faceplate switch on the QPC414 Network card.

**5** Install NT5D97 card in the assigned shelf and slot.

**6** Set the ENB/DIS faceplate switch to ON.

If the DDCH is installed, the DDCH LED should flash three times.

**7** If required, install the I/O adapters in the I/O panel.

**8** Run and connect the NT5D97 cables.

**CAUTION**
Clock Controller cables connecting the Clock Controller and NT5D97 card must **NOT** be routed through the center of the cabinet past the power harness. Instead they should be routed around the outside of the equipment shelves.

**9** If required, install connecting blocks at the MDF or wall mounted cross-connect terminal.

**10** If required, designate connecting blocks at the MDF or wall mounted cross-connect terminal.

**11** If required, install a Network Channel Terminating Equipment (NCTE). or Line Terminating Unit (LTU).

**12** Add related office data into switch memory.

**13** Enable faceplate switch S1. This is the “Loop Enable” switch.

The faceplate LEDs should go on for 4 seconds then go off and the OOS, DIS and ACT LEDs should go on again and stay on.

IF DDCH is installed, the DCH LED should flash 3 times.

**14** Run the PRI/DTI Verification Test.

**15** Run the PRI status check.

# Remove the NT5D97 DDP2

## Task summary list

The following is a summary of the tasks in this section:

**1** Remove the NT5D97 from 51C, 61C, 81C

Use Procedure 17 to remove the NT5D97 from Meridian 1 options 51C, 61C, and option 81C..

**CAUTION**

The static discharge bracelet located inside the cabinet must be worn before handling circuit cards. Failure to wear the bracelet can result in damage to the circuit cards.

**Procedure 17**
**Remove the NT5D97 from 51C, 61C, 81C**

**1** Determine the cabinet and shelf location of the NT5D97 card to be removed.

**2** Disable Network Loop using Overlay 60. The command is DISL “loop number.”

The associated DCHI may have to be disabled first. The faceplate switch ENB/DIS should not be disabled until both PRI2/DTI2 loops are disabled first.

**3** If the NT5D97 card is being completely removed, not replaced, remove data from memory.

**4** Remove cross connections at MDF to wall-mounted cross-connect terminal.

**5** Tag and disconnect cables from card.

**6** Rearrange Clock Controller cables if required.

> **CAUTION**
> Clock Controller cables connecting the Clock Controller and DDP2 card must **NOT** be routed through the center of the cabinet past the power harness. Instead they should be routed around the outside of the equipment shelves.

**7** Remove the DDP2 card only if both loops are disabled. If the other circuit of a DDP2 card is in use, **DO NOT** remove the card. The Faceplate switch ENB/DIS must be in the OFF (DIS) position before the card is removed, otherwise the system will initialize.

**8** Pack and store the NT5D97 card and circuit card.

## Configure the NT5D97 DDP2

After the NT5D97 DDP2 has been installed, the system may be configured using the same procedures as for the standard NT8D72BA PRI2 and QPC536E DTI2 card.

Consider the following when configuring the NT5D97 DDP2 card:

- The Meridian 1 software allows four ports to be defined for the NT6D80 MSDL. The DDCH (NTBK51AA) card has only two ports, 0 and 1; therefore, ports 2 and 3 must not be defined when using the NTBK51AA;
- Port 0 of the NTBK51AA can only be defined to work with Loop 0 of the NT5D97 DDP2 card, and Port 1 of the NTBK51AA can only be defined to work with Loop 1 of the NT5D97. This relationship must be reflected when configuring a new DCH in overlay 17 (in response to the DCHL prompt, enter either 0 or 1 when specifying the loop number used by the DCH);
- You cannot define one of the DDP2 loops for the NTBK51AA DDCH, and the other loop for the NT6D11AF/NT5K75AA/NT5K35AA DCH card or the NT6D80 MSDL.
- When configuring the NT5D97 DDP2 in DTI2 outgoing dial pulse mode, a Digit Outpulsing patch is required.

# NTD12 Dual-port DTI/PRI card installation

## Contents

The following are the topics in this section:



## Introduction

This section contains information required to install the NT5D12 1.5 Mb DTI/PRI Dual-port (DDP) card on Meridian 1 options 51C, 61C, and 81C.

For installation and removal procedures for the NTBK51AA Downloadable D-channel daughterboard, please refer to the section “NTBK51 DDCH installation and removal” on page 127.

# NT5D12 circuit card locations

Each NT5D12 circuit card requires one slot on a shelf. NT5D12 cards can be placed in any card slot in the network bus, subject to the cautionary note below.

# Port definitions

Since the NT5D12 card is dual-card, it equips two ports; these ports may be defined in the following combinations:

| Port 0 | Port 1 |
|---|---|
| DTI | DTI |
| DTI | PRI |
| PRI | DTI |
| PRI | PRI |
| DTI | Not configured |
| PRI | Not configured |
| Not configured | PRI |
| Not configured | DTI |

# Replacement scenarios of a digital trunk (QPC720/QPC472) by a DDP card

The following discussion describes possible scenarios when replacing a digital trunk QPC720 PRI card or QPC472 DTI card configuration with a NT5D12 DDP card configuration.

**Case 1** - The two ports of a QPC414 network card are connected to two digital trunks.

In this case, the QPC414 and the two digital trunks are replaced by a single DDP card, which is plugged into the CE shelf in the QPC414 slot.

**Case 2** - One port of the QPC414 card is connected to a digital trunk, and the second is connected to a peripheral buffer. Both cards are in network loop location.

In this case, the QPC414 should not be removed. The digital trunk is removed and the DDP card is plugged into one of the two empty slots.

**Case 3** - The CE shelf is full, one port of a QPC414 network card is connected to a digital trunk, and the second is connected to a peripheral buffer. This arrangement is repeated for another QPC414. The digital trunks are located in a shelf that provides only power.

In this case, the peripheral buffers will have to be re-assigned, so that each pair of buffers will use both ports of the same QPC414 card. The other QPC414 card may then be replaced by the NT5D12 DDP.

**Note in all cases** - If a QPC720 card is being replaced by a DDP card, the D-channel Handler or MSDL may be either reconnected to the DDP card, or removed if an onboard NTBK51AA DDCH card is used.

# NT5D12 switch settings

The NT5D12 card is equipped with 6x2 sets of DIP switches for trunk parameters settings for port0 and port1 respectively. Additionally, the NT5D12 card is equipped with one set of four DIP switches for the Ring Ground setting and one set of eight DIP switches for the D-channel Handler parameters setting.

The DIP switches are used for setting of default values of certain parameters. The general purpose switches are read by the firmware which sets the default values accordingly.

The following parameters are being set by the DIP switches. Factory setups are shown in bold.

## General Purpose Switches

A per trunk set of four DIP switches provides the default setting for operational modes. Switch set S9 is used for Trunk 0. Switch set S15 is used for Trunk 1. Refer to Table 51’

**Table 51**
**General purpose switch settings**

| Switch | Description | S9/S15 Switch Setting |
|---|---|---|
| 1 | Framing Mode | **OFF - ESF**<br>ON - SF |
| 2 | Yellow Alarm Method | **OFF - FDL**<br>ON - Digit2 |
| 3 | Zero Code Suppression Mode | **OFF - B8ZS**<br>ON - AMI |
| 4 | Unused | **OFF** |

## Trunk interface switches

### Transmission Mode

A per trunk switch provides selection for T1 transmission. See Table 52.

**Table 52**
**Trunk interface transmission mode switch settings**

| Description | S4/S10 Switch Setting |
|---|---|
| For future use. | OFF |
| T1 | **ON** |

### Line Build Out

A per trunk set of three switches provides selection between 0, 7.5 or 15 dB values. See Table 53.

**Table 53**
**Trunk interface line build out switch settings**

| Description | Switch Setting | | |
|---|---|---|---|
| | **S5/S11** | **S6/S12** | **S7/S13** |
| 0 dB | **OFF** | **OFF** | **OFF** |
| 7.5 dB | ON | ON | OFF |
| 15 dB | ON | OFF | ON |

### Receiver Impedance

A per trunk set of four DIP switches provides selection between 75, 100 or 120 Ω values. See Table 54.

**Table 54**
**Trunk interface receiver impedance switch settings**

| Description | S8/S14 Switch Setting | | | |
|---|---|---|---|---|
| 75 Ω | OFF | OFF | ON | OFF |
| 100 Ω | **ON** | **OFF** | **OFF** | **ON** |
| 120 Ω | OFF | OFF | OFF | ON |

## Ring ground switches

A set of four DIP switches selects which Ring lines are connected to ground. See Table 55

**Table 55**
**Ring ground switch settings**

| Switch | Description | S2 Switch Setting |
|---|---|---|
| 1 | Trunk 0 Transmit | **OFF - Ring line is not grounded**<br>ON - Ring line is grounded |
| 2 | Trunk 0 Receive | **OFF - Ring line is not grounded**<br>ON - Ring line is grounded |
| 3 | Trunk 1 Transmit | **OFF - Ring line is not grounded**<br>ON - Ring line is grounded |
| 4 | Trunk 1 Receive | **OFF - Ring line is not grounded**<br>ON - Ring line is grounded |

## DCH mode and address select switches

A set of eight DIP switches selects between an on-board NTBK51AA D-channel daughterboard and an external MSDL/DCHI card. In case of an on-board NTBK51AA D-channel daughterboard, four of the switches provide the daughterboard address. See Table 56.

**Table 56**
**DCH mode and address select switch settings**

| Switch | Description | S3 Switch Setting |
|---|---|---|
| 1-4 | D-channel daughterboard Address | See Table 57 |
| 5-7 | For future use. | OFF |
| 8 | External DCH or Onboard DDCH | **OFF - MSDL or DCHI card**<br>ON - Onboard DDCH daughterboard |

**Table 57**
**NTBK51AA daughterboard address select switch settings**

| Device Address[1] | Switch Setting | | | |
|---|---|---|---|---|
| 0[2] | OFF | OFF | OFF | OFF |
| 1 | ON | OFF | OFF | OFF |
| 2 | OFF | ON | OFF | OFF |
| 3 | ON | ON | OFF | OFF |
| 4 | OFF | OFF | ON | OFF |
| 5 | ON | OFF | ON | OFF |
| 6 | OFF | ON | ON | OFF |
| 7 | ON | ON | ON | OFF |
| 8 | OFF | OFF | OFF | ON |
| 9 | ON | OFF | OFF | ON |
| 10 | OFF | ON | OFF | ON |
| 11 | ON | ON | OFF | ON |
| 12 | OFF | OFF | ON | ON |
| 13 | ON | OFF | ON | ON |
| 14 | OFF | ON | ON | ON |
| 15 | ON | ON | ON | ON |

***Note 1:*** The maximum number of DCHI, MSDL, and DDCH devices in the system is 16.

The Device Addresses are equivalent to the MSDL DNUM designations.

***Note 2:*** Device address 0 is commonly assigned to the System Monitor.

**Figure 68**
**Switch functional areas on the NT5D12**

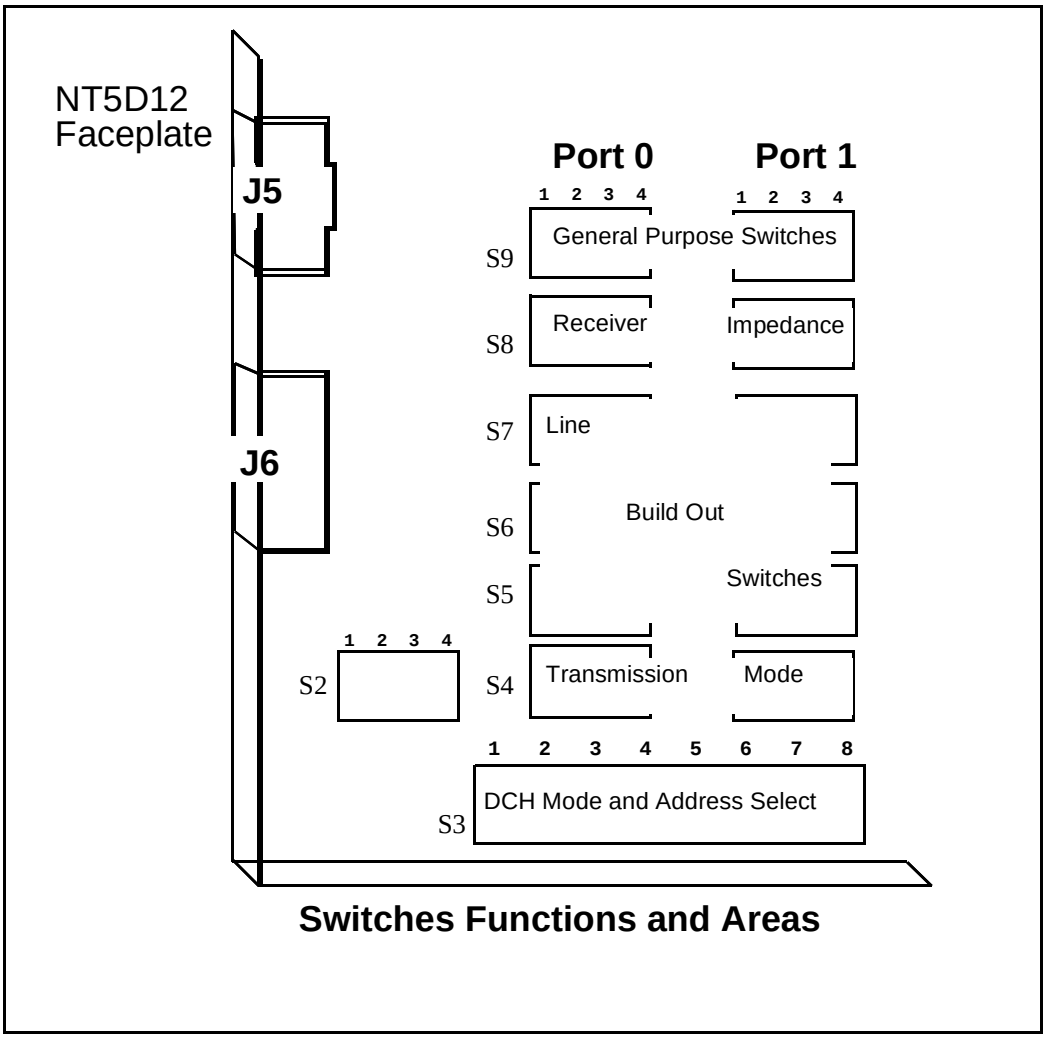

**Figure 69**
**NT5D12 switch default settings**

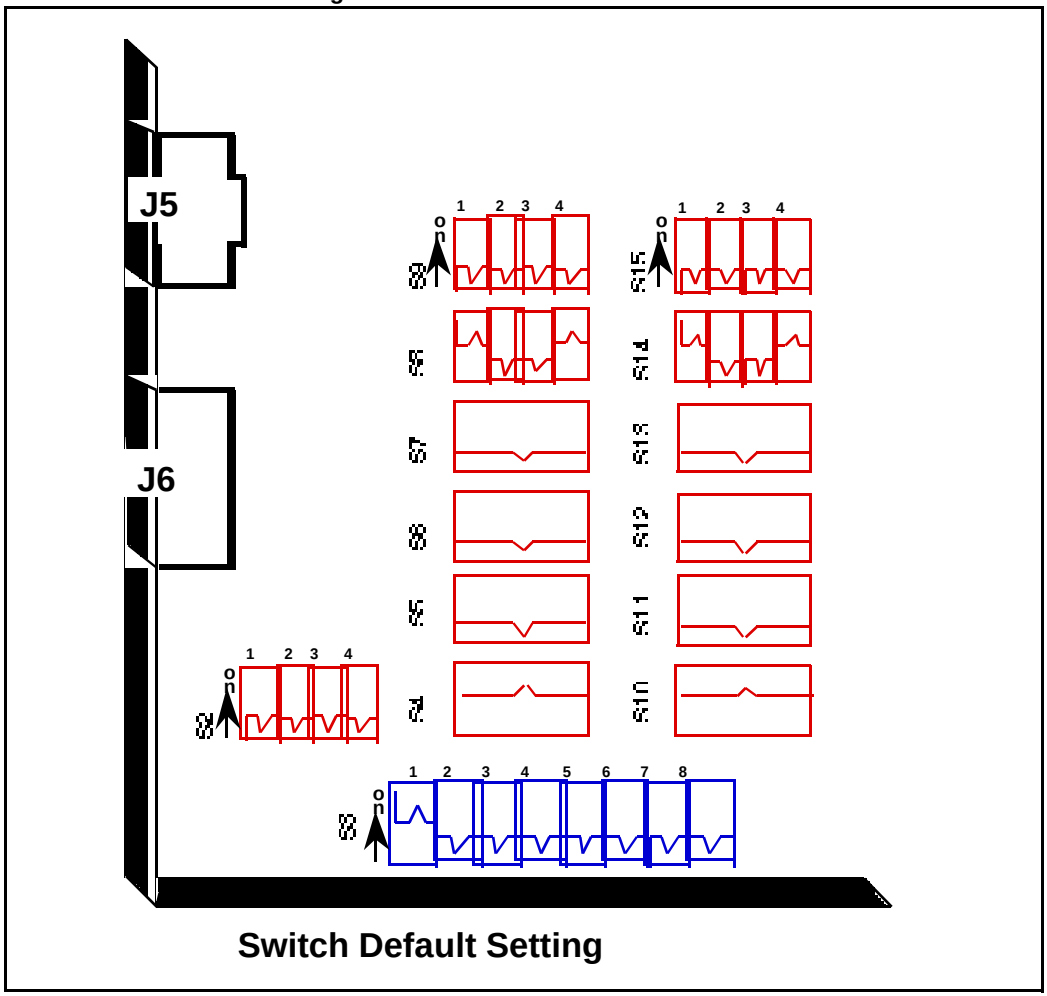

# Install the NT5D12 DDP

## Task summary list

The following is a summary of the tasks in this section:

**1** Install the NT5D12 on options 51C, 61C, 81C

Use Procedure 18 to install the NT5D12 on Meridian 1 options 51C, 61C, and 81C.

**CAUTION**

The static discharge bracelet located inside the cabinet must be worn before handling circuit cards. Failure to wear the bracelet can result in damage to the circuit cards.

.

**Procedure 18**
**Install the NT5D12 on options 51C, 61C, 81C**

**1** Determine the cabinet and shelf location where the NT5D12 card is to be installed. The NT5D12 can be installed in any card slot in the Network bus, subject to the cautionary note below..

**CAUTION**

Some installed-based systems may have a Bus Terminating Unit (BTU) already installed. This may interfere with a selected NT5D12 card location. In such cases, the NT5D12 should be installed in an alternate network bus card slot location.

**2** Unpack and inspect circuit cards and cables.

**3** If a DDCH is to be installed, refer to “NTBK51 DDCH installation and removal” on page 127.

**4** Set the option switches on the NT5D12 circuit card before installation. Refer to “NTBK51 DDCH installation and removal” on page 127.

S1 (faceplate switch) must be OFF (DIS) when installing the NT5D12. S1 on the NT5D12 corresponds to the faceplate switch on the QPC414 Network card.

**5** Install the NT5D12 circuit card in the assigned shelf and slot.

**6** Add related office administration data into the system memory.

**7** If required, install the I/O adapters in the I/O panel.

**8** Run and connect the NT5D12 cables.

**CAUTION**
Clock Controller cables connecting the Clock Controller and NT5D12 card must **NOT** be routed through the center of the cabinet past the power harness. Instead they should be routed around the outside of the equipment shelves.

**9** If required, install connecting blocks at MDF or wall mounted cross-connect terminal.

**10** If required, designate connecting blocks at MDF or wall mounted cross-connect terminal.

**11** If required, install Network Channel Terminating Equipment (NCTE).

**12** Enable faceplate switch S1. This is the “Loop Enable” switch.

The faceplate LEDs should go on for 4 seconds then go off and the OOS, DIS and ACT LEDs should go on again and stay on.

IF DDCH is installed, the DCH LED should flash 3 times.

**13** Run PRI/DTI Verification Test.

**14** Run PRI status check.

# Remove the NT5D12 DDP

## Task summary list

The following is a summary of the tasks in this section:

**1** Remove the NT5D12 DDP

Use Procedure 19 to remove the NT5D12 from Meridian 1 options 51C, 61C, and 81C.

> **CAUTION**
> The static discharge bracelet located inside the cabinet must be worn before handling circuit cards. Failure to wear the bracelet can result in damage to the circuit cards.

**Procedure 19**
**Remove the NT5D12 DDP**

**1** Determine the cabinet and shelf location of the NT5D12 card to be removed.

**2** Disable Network Loop using Overlay 60. The command is DISL “loop number.”

The associated DCHI may have to be disabled first. The faceplate switch S1 should not be disabled until both PRI loops are disabled first.

**3** If the NT5D12 card is being completely removed, not replaced, remove data from memory.

**4** Remove cross connections at MDF to wall-mounted cross-connect terminal.

**5** Tag and disconnect cables from card.

**6** Rearrange Clock Controller cables if required.

> **CAUTION**
> Clock Controller cables connecting the Clock Controller and NT5D12 card must **NOT** be routed through the center of the cabinet past the power harness. Instead they should be routed around the outside of the equipment shelves.

**7** If the other circuit of a NT5D12 card is in use, **DO NOT** remove the card.

**8** Remove the NT5D12 card only if both loops are disabled. Switch S1 (faceplate switch) must be in the OFF (DIS) position before the card is removed.

**9** Pack and store the NT5D12 card and circuit card.

## Configure the NT5D12 DDP

After the NT5D12 DDP has been installed, it may be configured using the same procedures as for the standard QPC720 PRI card.

Consider the following when configuring the NT5D12 DDP card:

- The Meridian 1 software allows four ports to be defined for the NT6D80 MSDL. The DDCH (NTBK51AA) card has only two ports, 0 and 1; therefore, ports 2 and 3 must not be defined when using the NTBK51AA;
- Port 0 of the NTBK51AA can only be defined to work with Loop 0 of the NT5D12 DDP card, and Port 1 of the NTBK51AA can only be defined to work with Loop 1 of the NT5D12. This relationship must be reflected when configuring a new DCH in overlay 17 (in response to the DCHL prompt, enter either 0 or 1 when specifying the loop number used by the DCH);
- You cannot define one of the NT5D12 loops for the NTBK51AA DDCH, and the other loop for the QPC757 DCHI or the NT6D80 MSDL.

# Clock Controller Description and Installation

## Contents

The following are the topics in this section:

### Reference list

The following are the references in this section:

- *Option 11C 1.5Mb DTI/PRI* (553-3011-310)
- *Option 11C 2.0Mb DTI/PRI* (553-3011-315)

## Introduction

This chapter introduces the NTRB53 Clock Controller, and provides procedures on how to install this clock controller on Meridian 1 Options 51C, 61C, and 81C systems.

The NTRB53 Clock Controller will replace the QPC471H and QPC775F in new systems. QPC471H and QPC775F Clock Controllers will continue to be supported.

> ***Note 1:*** The description section of this chapter applies to all supported Meridian 1 systems, that is, Options 11C, 51C, 61C, and 81C. However, the installation procedures apply only to Options 51C, 61C, and 81C. For Option 11C specific information, refer to *Option 11C 1.5Mb DTI/PRI* (553-3011-310) and *Option 11C 2.0Mb DTI/PRI* (553-3011-315).
>
> Also, the illustrations used in the description section depict an Option 11C. However, the system may also be representative of an Option 51C, 61C, or 81C.

## Description

This section provides an overview on the use of clock controllers on Meridian 1 Option 11C, 51C, 61C, and 81C systems. For Meridian 1 large systems, the following clock controllers are supported:

- NTRB53
- QPC471
- QPC775

> ***Note:*** Clock controllers cannot be mixed in one system.

The NTRB53 Clock Controller is available for all markets. The QPC471 Clock Controller is available for U.S. markets. Vintages A through G of the QPC471 Clock Controller can be used in one system; vintage H of QPC471 Clock Controllers cannot be mixed with clock controllers of other vintages.

The QPC775E Clock Controller card is available for only the Canadian and International markets.

## Need for synchronization

Digital trunking requires synchronized clocking so that a shift in one clock source will result in an equivalent shift of the same size and direction in all parts of the network.

When digital signals are being transported over a communication link, the receiving end must operate at the same frequency (data rate) as the originating end to prevent loss of information. This is referred to as link synchronization. If both ends of a communication link are not in synchronization, data bit slips occur and therefore a loss of data results. In general, accurate timing is very important, but more importantly synchronized timing is a must for reliable data transfer.

When only two Meridian 1 switches are interconnected, synchronization can be achieved by operating the two systems in a master/slave mode whereby one system derives its timing from the other. However, in a network of digital systems, slips can be better prevented by forcing all digital systems to use a common reference clock (see Figure 70).

## Supported Clock Controllers

For Meridian 1 large systems, the following clock controllers are supported:

- NTRB53
- QPC471
- QPC775

### NTRB53 Clock Controller

Introduced with Release 25.40, the NTRB53 Clock Controller is a replacement for the QPC471 and QPC775 Clock Controllers. The NTRB53 clock controller retains existing functionality.

Software configuration of the clock remains unchanged. Meridian X11 Release 25.40 software introduces a PSDL object to allow field upgrades of the clock's firmware. Overlay changes allow for force download and status checking. Support for the IDC command and hardware inventory are also included.

The NTRB53 Clock Controller is compatible with the following systems and software releases.

**Table 58**
**NTRB53 card compatibility guide**

| Meridian 1 | Release 25.40 | Release 19 to 25.3x |
|---|---|---|
| Option 11C/Mini | No | No |
| Option 21E | No | Yes |
| Option 51 | No | Yes |
| Option 51C | Yes | Yes |
| Option 61 | No | Yes |
| Option 61C | Yes | Yes |
| Option 71 | No | Yes |
| Option 81 | No | Yes |
| Option 81C | Yes | Yes |

***Note:*** PSDL enhancements will not be available for software prior to Release 25.40.

### *System Initialization*

During system initialization, the system software will verify if the clock controllers equipped in the system are the downloadable clock controllers (NTRB53) or not. If the clock controllers are identified as the downloadable clock controller cards, then both downloadable clock controller cards will be checked for the software version number they are running with. This is compared with the version number of the PSDL file stored in the Meridian 1 software database.

If there is a mismatch between the two version numbers and Meridian 1 database has the higher version number, the card will be put in the PSDL downloading tree. Once the entry is added in the PSDL tree, the preprocess step is done. The next step is for the system to initiate the downloading in the background, using the PSDL tree. As soon as the download complete message is received from the card, the CPU sends a message to reset the clock controller card so that it boots with the new software. Once a selftest is complete the core sends an enable base message to enable the card.

### *Maintenance Overlays*

Downloading can be initiated from Overlay 60 for the inactive clock controller card as part of the enabling sequence of the card. A download can be forced by specifying the optional parameter FDL (Force Download) when enabling the card. At the prompt, enter:

| | |
|---|---|
| ENL CC x FDL | Enable Clock in side x with the force download option |

If the optional parameter is not specified, then downloading is conditional. This means that the version number of the loadware on the clock controller card will be checked against the version number stored on the Meridian 1 disk. If a mismatch is found and the version number in the Meridian 1 software database is higher, then downloading will be initiated for that card. The entry for the card is not added to the PSDL tree at this time. Instead, downloading is initiated on a single card and only that card will be allowed to perform the force download option.

## QPC471 and QPC775 Clock Controllers

Clock Controllers QPC471 and QPC775 will continue to function with X11 software Release 25.40 and above on the following systems:

- 51C
- 61C
- 81C

***Note:*** See “Description” on page 206. for market and application availability information.

## Synchronization methods

There are two common methods of operation for maintaining timing coordination between switching systems, Plesiosynchronous and Mesosynchronous.

### Plesiosynchronous operation

In a Plesiosynchronous operation, nodal clocks run independently (free run) at the same nominal frequency. There are frequency differences between clocks resulting in frame slips (see “Frame slip” on page 212.) The magnitude of frame slips are directly proportional to the frequency difference. Slips are inevitable but can be minimized by using very stable clocks and elastic stores or buffers. These buffers are capable of absorbing a certain number of data bits to compensate for slight variances in clock frequencies.

### Mesosynchronous operation

In a Mesosynchronous operation, nodal clocks are continuously and automatically locked to an external reference clock. With this method, frame slips can be eliminated if elastic stores are large enough to compensate for transmission variances. Mesosynchronous operation is virtually slip free.

Whenever possible the Meridian 1 PBX uses the Mesosynchronous mode of operation by using the clock controller circuit cards to lock onto an external reference source (such as the Central Office, another Meridian 1 PBX, and so on). This statement is true unless the Meridian 1 is used as a Master in an independent/private network (no digital links to a higher Node Category).

In an isolated private network, the Meridian 1 clock controller can operate in free run mode and act as a master clock to be tracked by other PBX systems in the private network.

## Hierarchical synchronization

Figure 70 provides a general view of the Digital Network Clock Synchronization including the four stratum level Node Categories. Stratum 1 being the most accurate and Stratum 4 being the least accurate. Meridian 1 clocking meets Node Category E Stratum 4 requirements. Also shown are ways of providing a Secondary Clock Source while preventing timing loops.

**Figure 70**
**Hierarchical Synchronization**

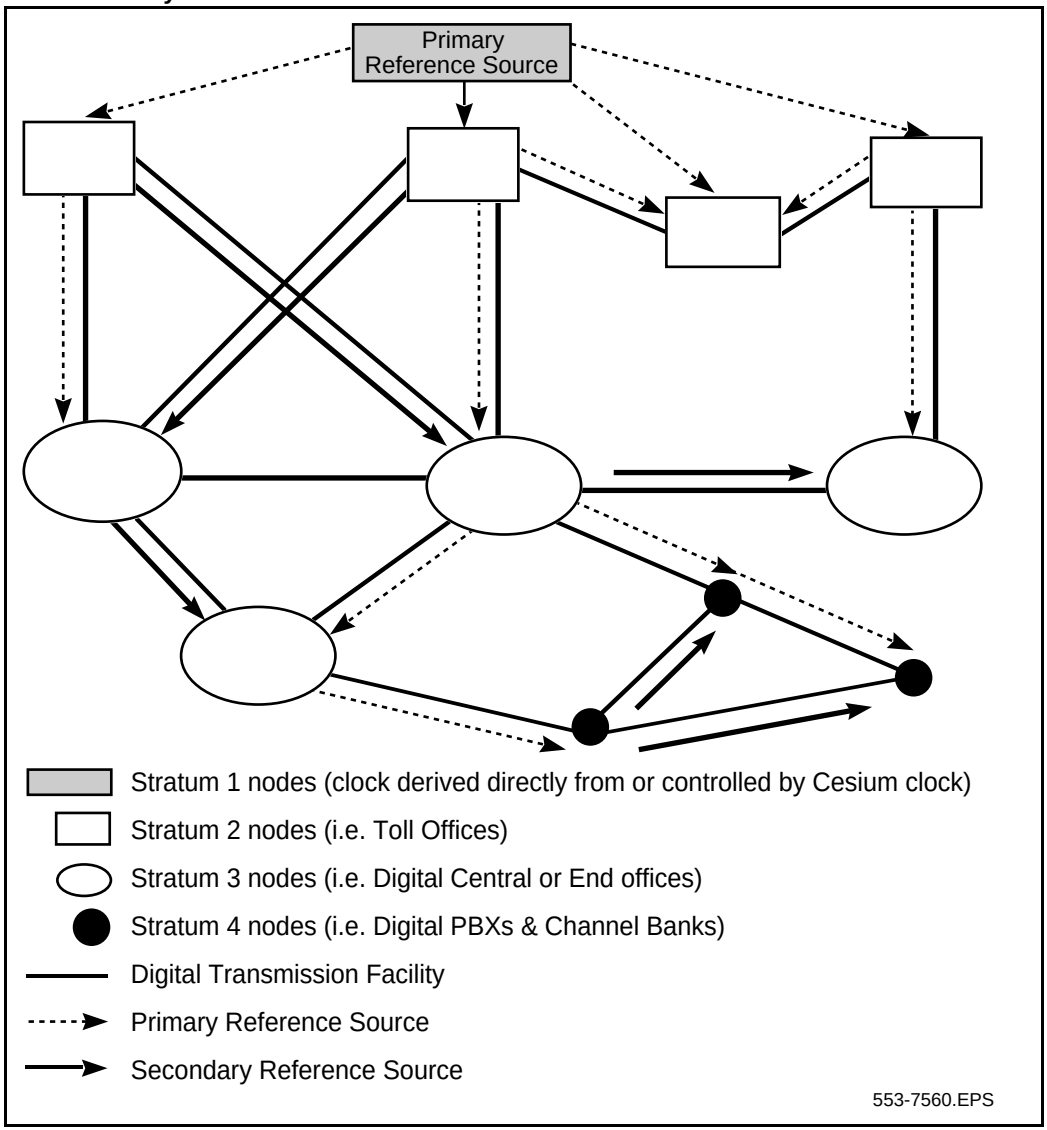

## Stratum levels

In a digital network, nodes are synchronized using a priority master/slave method. Digital nodes are ranked in Stratum levels 1 to 5. Each node is synchronized to the highest ranking node in its neighborhood with which it has a direct link. Refer to Table 59.

**Table 59**
**Node categories and stratum levels**

| | **Stratum 2** | **Stratum 3** | **Stratum 4** |
|---|---|---|---|
| **Accuracy** | +/- 1.6 * $10^{-8}$ Hz | +/- 4.6 * $10^{-6}$ Hz | +/- 3.2 * $10^{-5}$ Hz |
| **Holdover** | 1 * $10^{-10}$ per day | <= 255 frame slips in 1st 24 hours | Not Required |
| **Hardware Duplication** | Required | Required (Note 1) | Not Required |
| **MTIE During Rearrangement** | MTIE <= 1 usec Phase Change Slope: <= 81 ns in any 1.326 msec | MTIE <= 1 usec Phase Change Slope: <= 81 ns in any 1.326 msec | No Requirement (Note 2) |
| **Pull-in Range** | 3.2 * $10^{-8}$ Hz | 9.2 * $10^{-6}$ Hz | 6.4 * $10^{-5}$ Hz |
| **Dedicated Timing Required** | Required | Required | Not required |

***Note 1:*** Non-duplicated clock hardware that meets all other stratum 3 requirements is referred to as stratum 3ND.

***Note 2:*** Stratum 4 clock hardware that meets MTIE requirements during rearrangements is referred to as 4E.

## Frame slip

Digital signals must have accurate clock synchronization for data to be interleaved into or extracted from the appropriate timeslot during multiplexing and demultiplexing operations. A Frame Slip is defined (for 2 Mbyte links) as the repetition of, or deletion of the 256 data bits of a CEPT frame due to a sufficiently large discrepancy in the read and write rates at the buffer (clocks are not operating at exactly the same speed).

When data bits are written into (added to) a buffer at a slightly *higher* rate than that at which they are being read (emptied), sooner or later the buffer overflows This is a slip-frame deletion.

In the opposite situation, when data bits are written (added) into a buffer at slightly *lower* rate than that at which they are being read (emptied), eventually the buffer runs dry or underflows. This is also a slip-frame repetition.

A 1.5 Mbyte PRI contains a buffer large enough to hold about 2 full DS-1 frames (193 x 2 = 386). A 2 Mbyte PRI contains a buffer large enough to contain 2 full frames (256 x 2 = 512 bits). The buffere is normally kept half full (1 frame).

Slippage has impact on the data being transferred, as is shown in Table 60. All of the degradations shown in the table can be controlled or avoided with proper clock synchronization.

**Table 60**
**Performance impact of one slip on service type**

| Service | Potential Impact |
|---|---|
| Encrypted Text | Encryption key must be resent. |
| Video | Freeze frame for several seconds. Loud pop on audio. |
| Digital Data | Deletion or repetition of data. Possible misframe. |
| Facsimile | Deletion of 4 to 8 scan lines. Dropped call. |
| Voice Band Data | Transmission Errors for 0.01 to 2 s. Dropped call. |
| Voice | Possible click. |

## Guidelines

Some key points to keep in mind when designing Network Synchronization:

- Where possible, the Master Clock Source should always be from a Node Category/Stratum with higher clock accuracy, that is, a PBX connected to the Central Office (CO.) The CO is the Master and the PBX is the Slave.

- The source should not be in free-run itself (providing its own clock) unless it is operating in a fully independent network where the source acts as a Master (see “Plesiosynchronous operation” on page 210.)
- When connecting two PBXs together (no CO connections), the most reliable PBX should be the Master. Reliability here refers to Dual CPU/Dual Clock, battery back-up or stratum level of the clock controller.
- Avoid timing loops. A timing loop occurs when a clock using as its reference frequency a signal that it itself traceable to the output of that clock. The formation of such a closed timing loop leads to frequency instability and is not permitted. Timing loops are sometimes unavoidable on the secondary clock reference source.
- Ensure all CO/PBX links used as clock references have a traceable path back to the same stratum 1 clock source.

While it is beyond the scope of this discussion to provide detailed Network Synchronization, the following examples illustrate some of the basic concepts to achieve stable clocking.

**Figure 71**
**Example 1, Isolated Private Network**

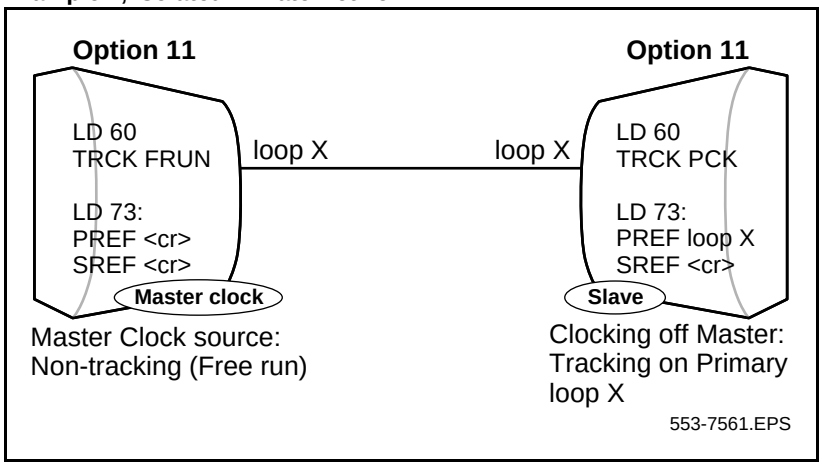


In this example, there is no digital connection to the Central Office.

**Figure 72**
**Example 2, Isolated Private Network with Secondary Reference Clock**

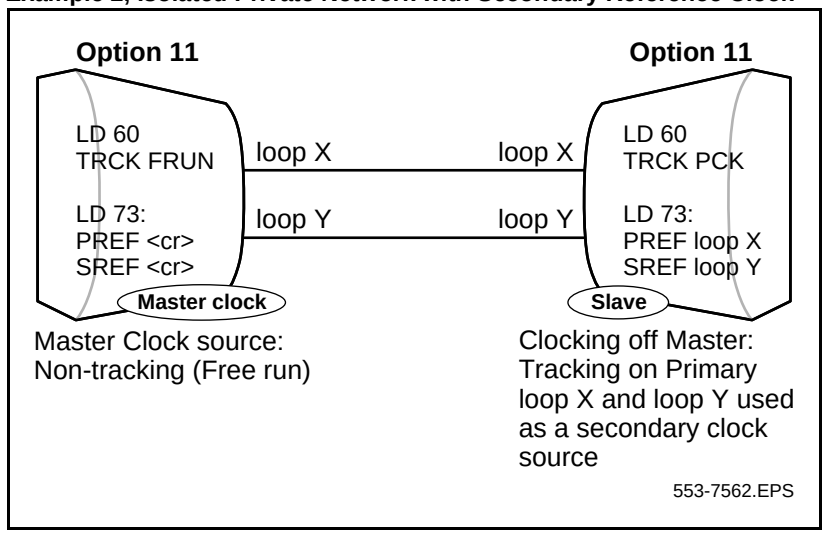


In this example, there is no digital connection to the Central Office. For tie lines between PBXs facilitated by a central office, clocking is derived from the PBX, not the CO. When a second Digital loop is available, it can be used as a Secondary Clock source in case the Primary Source fails.

**Figure 73**
**Example 3, Clocking Hierarchy referenced to a Public Network Master Clock**

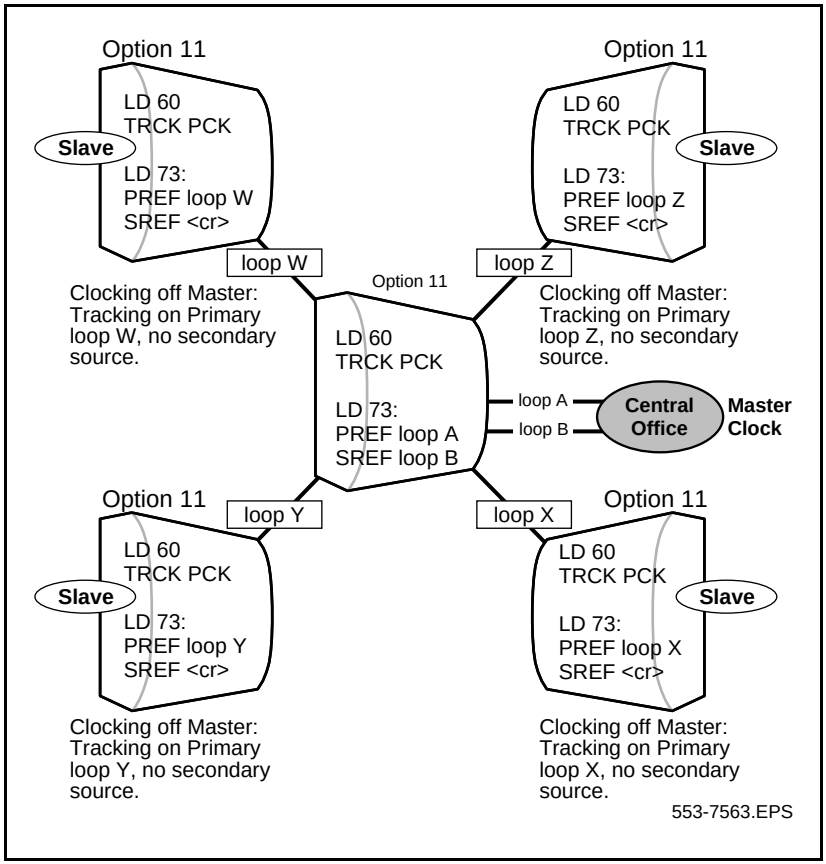


This is an example of a “STAR” arrangement— one Hub PBX is linked to the Central Office and all other PBXs are connected as slaves. When a second Digital loop from the Meridian 1 which forms the hub of this network becomes available, it can be used as a Secondary Clock Source in case the Primary Source fails.

**Figure 74**
**Example 4, Alternate Clocking from the same CO**

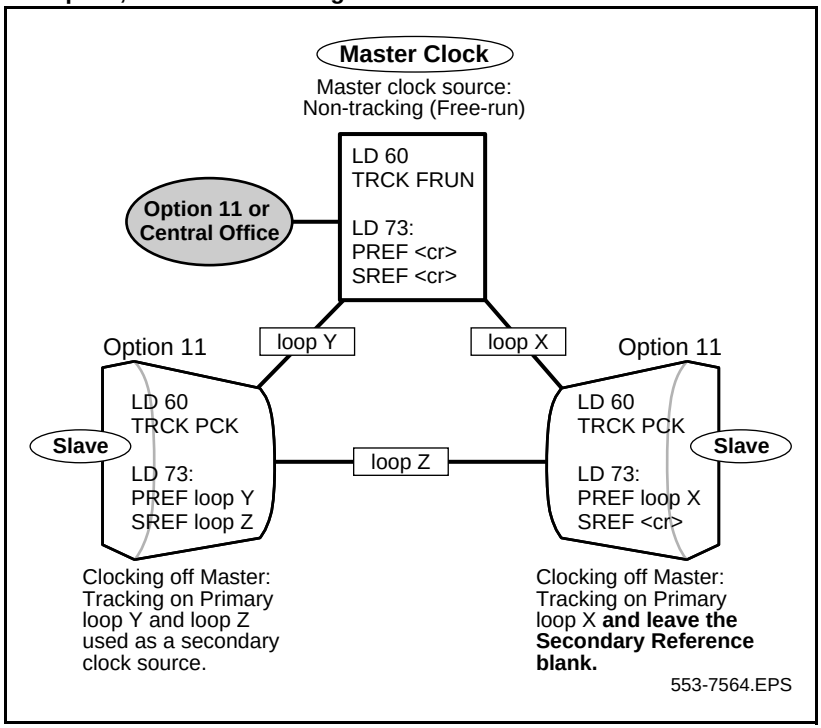


In this case, a digital connection to the Central Office may exist (i.e. Loops X and Y). When a second Digital loop from the CO or Master M-1 becomes available, it can be used as a Secondary Clock Source in case the Primary Source fails.

To avoid timing loops, in example 4-4 the most reliable slave system should not have a Secondary Clock Source (SREF= <cr>). In this example, this is illustrated by the node which supports loops X and Z.

**Figure 75**
**Example 5, digital connection to the CO**

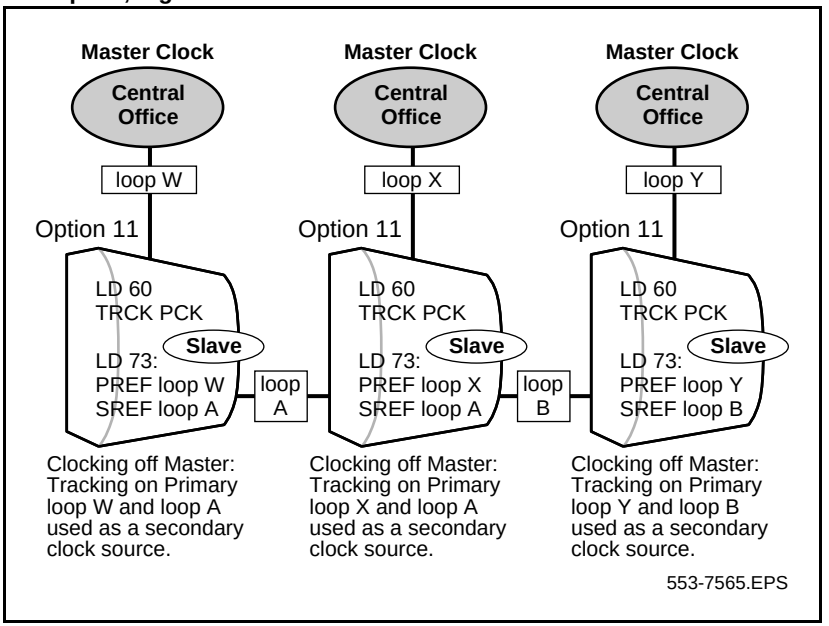


In this example, digital connections to the Central Office do exist. When a second Digital loop from the CO becomes available, it can be used as a Secondary Clock Source in case the Primary Source fails.

Slaves can track on each other as a secondary source since the chances of both links to the Central Offices going down at the same time are minimal.

All Central Offices must have a path back to the same stratum 1 source.

**Figure 76**
**Example 6, Complex Isolated Private Network**

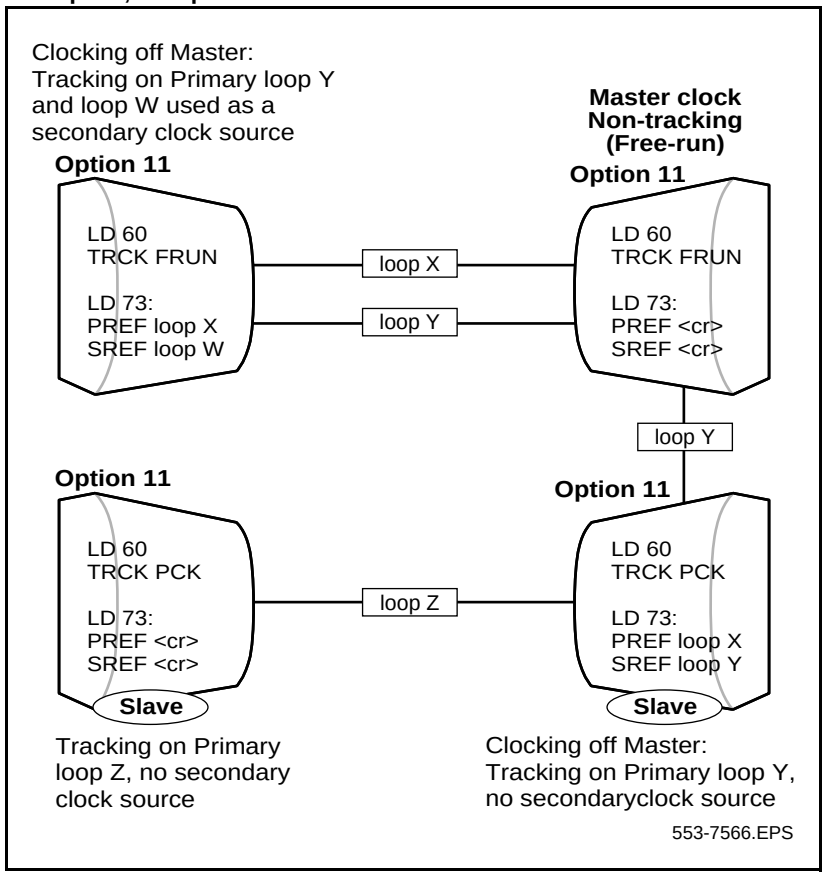


Digital connections to the Central Office do not exist in this example. If it does, the PBX connected to it will track off the CO and will in turn be used as a clock source to other nodes.

When a second Digital loop from the Master Meridian 1/SL-1 becomes available, it can be used as a Secondary Clock Source in case the Primary Source fails.

**Figure 77**
**Example 7, Network Clocking with MUX**

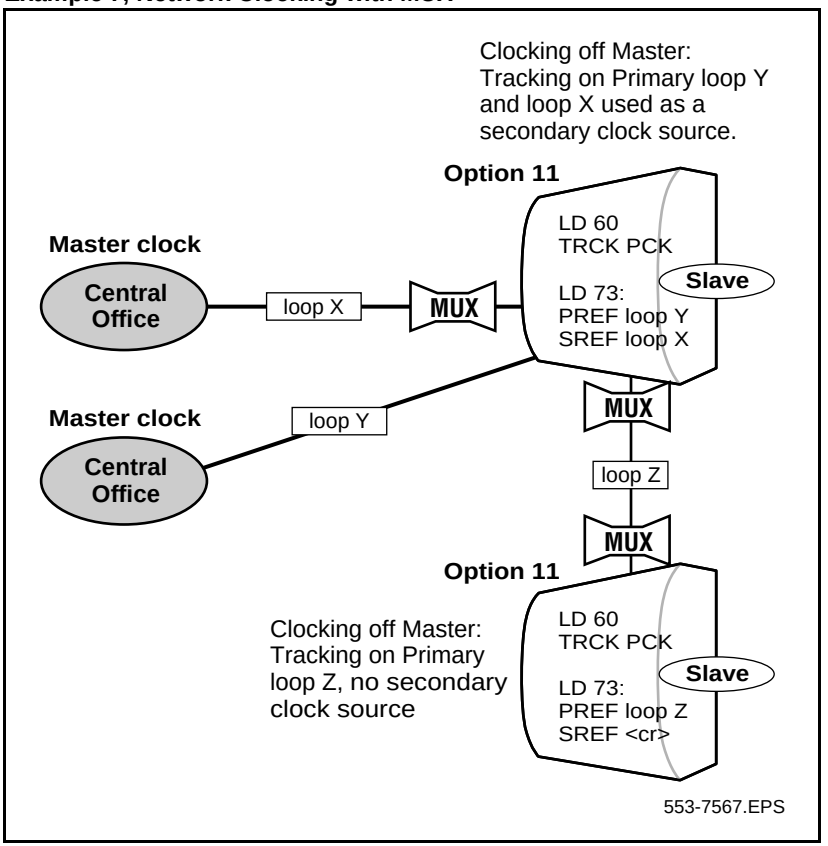


In this example, the direct connection to the CO (without a MUX) should be used as a primary clock reference since there is the least amount of hardware involved. The MUX must pass the clock and not generate its own clock; in other words, it must also be a slave (not Free Run). Synchronized clocking is required.

## Modes of operation

There are two modes of operation, tracking mode and free run (non-tracking) mode.

### Tracking mode

In tracking mode, the Primary Rate Interface (PRI) or Digital Trunk Interface (DTI) loop supplies an external clock reference to the on-board clock controller. Two PRI or DTI packs can operate in tracking mode, with one defined as the primary reference source for clock synchronization, the other defined as a secondary reference source. The secondary reference acts as a back-up to the primary reference.

### Free run (non-tracking) mode

The clock synchronization for a PRI loop may operate in free-run mode if:

- the loop is not defined as the primary or secondary clock reference
- the primary and secondary references are disabled
- the primary and secondary references are in a local alarm state

## Option 11C Clock Controller daughterboard

The Meridian 1 Option 11C supports a single on-board clock controller daughterboard, the NTAK20, located on either:

- the NTRB21 1.5 Mbyte DTI/PRI card
- the NTAK09 1.5 DTI/PRI card
- the NTAK10 2 Mbyte DTI card
- the NTAK79 2 Mbyte PRI card
- the NTBK50 2 Mbyte PRI card

The clock controller circuitry synchronizes the Option 11C to an external reference clock and generates and distributes the clock to the system. This enables the Option 11C to function either as a slave to an external clock or as a clocking master.

> ***Note:*** When configuring ISL over analog trunks, clock controllers are not required.

# Installation procedures

This section provides procedures on how to install a clock controller on Meridian 1 Options 51C, 61C, and 81C.

**CAUTION**
Do not deviate from the procedures described in this section. Call processing can stop if procedural steps are not followed properly.

## Determine slots and shelves

The clock controller card installation site varies from system to system. Table 61 shows the systems, the shelves used, and the available slot or slots.

**Table 61**
**Clock Controller shelves and slots**

| System | Shelf | Slot(s) |
|---|---|---|
| 51C, 61C | NT6D39 CPU/NET | 9 |
| 81C | NTDA35 Network Module | 13 |

## Set switches

Before installing a clock controller, set the switches as shown in Table 62, Table 63, and Table 64. Table 62 displays the settings for different vintages of the QPC471. Table 63 shows the settings for the QPC775. Table 64 shows settings for the NTRB53.

**Table 62**
**Clock Controller switch settings for QPC471 vintage H**

| System | SW1 | | | | SW2 | | | | SW4 | | | |
|---|---|---|---|---|---|---|---|---|---|---|---|---|
| | 1 | 2 | 3 | 4 | 1 | 2 | 3 | 4 | 1 | 2 | 3 | 4 |
| 51C, 61C | on | on | on | on | off | off | off | off | off | on | * | * |
| 81 | off | off | off | off | off | off | off | off | off | on | * | * |
| 81C | on | off | off | off | off | off | off | off | ** | on | * | * |
| 81C with Fiber Network | on | off | off | off | off | off | off | off | ** | on | * | * |
| | | | | | *Cable length between the J3 faceplate connectors: | | | | | | | |
| | | | | | 0–4.3 m (0–14 ft) | | | | | | off | off |
| | | | | | 4.6–6.1 m (15–20 ft) | | | | | | off | on |
| | | | | | 6.4–10.1 m (21–33 ft) | | | | | | on | off |
| | | | | | 10.4–15.2 m (34–50 ft) | | | | | | on | on |

* If there is only one clock controller card in the system, set to OFF. If there are two clock controller cards, determine the total cable length between the J3 connectors (no single cable can exceed 25 ft.) and set these two switch positions for this cable length, as shown above. The maximum total (combined) length is 50 ft. Set the switches on both cards to the same settings.

** Set to ON for clock controller 0. Set to OFF for clock controller 1.

***Note:*** FNF based-systems the total clock path length is equal to the length of the NTRC49 cable used to connect between the two clock controller cards.

**Table 63**
**Clock Controller switch settings for QPC775**

| System | SW2 | SW3 | SW4 |
|---|---|---|---|
| 51C, 61C | ON | OFF | ON |
| 81C | OFF | OFF | ON |

**Table 64**
**Clock Controller switch settings for NTRB53**

| Multigroup/ Singlegroup | Machine Type # 1 | Faceplate Cable Length (CC to CC) | | | Side Number | Machine Type #2 |
|---|---|---|---|---|---|---|
| 1 | 2 | 3 | 4 | | 5 | 6 |
| MultiGroup = Off<br>SingleGroup = On | 21E = Off<br>51, 61, 51C, 61C,<br>71, 81, 81C = On | Off | Off | 0-14 ft | Side 0 = On<br>Side 1 = Off | 71, 81 = Off<br>21E, 51, 51C, 61, 61C, 81C = On |
| | | Off | On | 15-20 ft | | |
| | | On | Off | 21-33 ft | | |
| | | On | On | 34-50 ft | | |

***Note:*** Switches 7 and 8 are not used.

## Start the Clock Controller

The clock controller, when first enabled, is in free run mode. It stays in this mode for several minutes before being switched to tracking mode. Manual mode setting is possible using LD 60.

All clock controllers begin tracking within approximately 15 minutes.

## Clock Controller commands

During the installation procedure you will use some of the clock controller commands available in LD 60. Refer to *X11 Software Input/Output Guides* (553-3001-511)

## LD 39 commands with the NTRB53 Clock Controller

| Command | Description | Pack/ Rel |
|---|---|---|
| DIS SCG x | Disable SCG card x (0 or 1).<br>Not applicable for NTRB53 Clock Controller. Use LD 60 instead. | basic-1<br>basic-25.4 |
| ENL SCG x | Enable SCG x (0 or 1).<br>Not applicable for NTRB53 Clock Controller. Use LD 60 instead. | basic-1<br>basic-25.4 |
| SCLK | Switch clock to other SCG.<br>Functions with NTRB53 Clock Controller | basic-1<br>basic-25.4 |
| STAT SCG x | Print status of SCG x (0 or 1).<br>Prints normal status of NTRB53 (not full status) | basic-1<br>basic-25.4 |

## Install or replace a Clock Controller on Option 51C, 61C half group

### Task summary list

The following is a summary of the tasks in this section:

**1** Install a clock controller Option 51C, 61C single group

Use Procedure 20 to install a clock controller on a Meridian 1 Option 51C, 61C half group.

**Procedure 20**
**Install a clock controller Option 51C, 61C single group**

**1** Unpack and inspect circuit pack.

**2** Determine the cabinet and shelf location. Refer to Table 61.

**3** Set the clock controller switch. Refer to Table 62, Table 63, or Table 64.

**4** Set the ENL/DIS toggle switch to DIS (disable).

**5** If replacing a clock controller, do the following:

— Perform a status check on the clock with the SSCK command in LD 60. The new controller should have the same status.

***Note:*** ERR20 messages may be generated. These can usually be ignored. However, excessive clock switching should be avoided, especially when counters are near the maintenance or out-of-service thresholds. Excessive switching could generate threshold-exceeded messages or cause the PRI to be automatically disabled. Check the counters in LD 60. If necessary, reset the counters using the RCNT command.

**a.** Set the old card's faceplate ENL/DIS switch to DIS.

**b.** Disconnect the cables from the old clock controller card and remove the card from the shelf.

**6** If the 3PE switches have not been modified to recognize the clock controller card, adjust them.

**7** Set faceplate ENL/DIS switch to DIS.

**8** Install the clock controller in the selected slot.

**9** Run and connect cables

**a.** Connect the primary reference to J2.

**b.** If available, connect the secondary reference to J1.

**c.** Connect the cable between the two clocks to J3 on each controller card.

**10** Set the faceplate ENL/DIS switch to ENL.

***Note:*** Verify that the faceplate LED flashes three times to ensure the clock controller self test passed.

**11** Enable the clock controller by entering ENL CC x in LD 60.

**12** Set the error detection thresholds and clock synchronization controls in LD 73. (Optional with card replacement; required with new installation.)

**13** To track on a primary or secondary reference clock, use LD 60. Use the following command:

TRCK PCK (for primary)

| | |
|---|---|
| SCLK | (for secondary) |
| FRUN | (for free-run) |

**14** Issue the status check command, SSCK.

***Note:*** In order for the clock enhancement feature in the clock controller (NTRB53) to be fully functional, the user must issue a manual INI to activate the clock enhancement feature.

——————————— ***End of Procedure*** ———————————

## Install or replace a Clock Controller on Option 61C/81C

### Task summary list

The following is a summary of the tasks in this section:

**1** Install a Clock Controller on Option 61C/81C

Use Procedure 21 to install a clock controller on a Meridian 1 Option 81C.

**Procedure 21**
**Install a Clock Controller on Option 61C/81C**

**1** Unpack and inspect circuit pack.

**2** Determine the cabinet and shelf location. Refer to Table 61 on page 222.

**3** Set the clock controller switch. Refer to Table 62, Table 63, or on page 223.

**4** Set the ENL/DIS toggle switch to DIS (disable).

**5** If replacing a clock controller, do the following:

- Perform a status check on the clock with the SSCK command in LD 60. The new controller should have the same status.
- Use LD 135 to STAT the CPU and switch if necessary
- Disable the old card using LD 60.

***Note 1:*** Do not disable an active clock or a clock associated with an active CPU

***Note 2:*** ERR20 messages may be generated. These can usually be ignored. However, excessive clock switching should be avoided, especially when counters are near the maintenance or out-of-service thresholds. Excessive switching could generate threshold-exceeded messages or cause the PRI to be automatically disabled. Check the counters in LD 60. If necessary, reset the counters using the RCNT command.

**a.** Set the old card's faceplate ENL/DIS switch to DIS.

**b.** Disconnect the cables from the old clock controller card and remove it from the shelf.

**6** Install the new clock controller in the selected slot.

**7** Run and connect the cables

**a.** Connect the primary reference to J2.

**b.** If available, connect the secondary reference to J1.

**c.** Connect the cable from J3 on each controller card to the junctor group connector.

**8** Set the faceplate ENL/DIS switch to ENL.

**9** Execute the ENL CC X command in LD 60. The faceplate LED should go to the OFF state.

**10** Set the error detection thresholds and clock synchronization controls in LD 73. (Optional if replacing card; required with new installation.)

**11** To track on a primary or secondary reference clock, use LD 60. The command follows:

| | | |
|---|---|---|
| TRCK | PCK | (for primary) |
| | SCLK | (for secondary) |
| | FRUN | (for free-run) |

**12** Issue the status check command, SSCK.

**13** (Optional) Wait two minutes before activating the newly installed clock controller with the LD 60 SWCK command.

***Note:*** This will allow a smooth transition of the clock controller upgrade.

**14** Repeat, if necessary, for the second clock controller.

*End of Procedure*

## Upgrade to an NTRB53 Clock Controller on Option 61C/81C

Follow these procedures to replace the existing clock controller with the NTRB53 Clock Controller on Meridian 1 large systems.

> ***Note:*** The NTRB53 Clock Controller cannot be combined with a QPC775 or a QPC471 card in one system.

**Procedure 22**
**Remove old equipment**

**1** For dual core systems, ensure the clock controller card being removed is on the inactive core. If you need to switch cores go to LD 135 and enter:

| | |
|---|---|
| LD 135 | |
| SCPU | Switch cores |
| **** | Exit the overlay |

**2** Disable the QPC775 or QPC471 Clock Controller card. At the prompt, enter:

| | |
|---|---|
| LD 60 | Load the program |
| SSCK x | Get status of system clock where x = 0 or 1 |

If the clock is active, switch clocks. At the prompt, enter:

| | |
|---|---|
| SWCK | Switch system clock from active to standby |
| SSCK x | Get status of system clock where x = 0 or 1 |

Ensure the other clock controller is active and in the free run mode. At the prompt, enter:

| | |
|---|---|
| SSCK x | Get status of system clock where x = 0 or 1 |
| TRCK FRUN | Set clock controller tracking to free run |

**3** Disable the clock controller card you are removing. At the prompt, enter:

| | |
|---|---|
| DIS CC x | Disable system clock controller where x = 0 or 1 |

**4** Set the ENL/DIS switch to DIS on the card you are removing.

**5** Tag and disconnect the cables to the card you are removing.

**6** Unhook the locking devices on the card and pull it out of the card cage.

*End of Procedure*

**Procedure 23**
**Installing new equipment**

**1** Set the ENB/DIS switch to DIS on the replacement card.

**2** Set the option switches on the replacement card (NTRB53). Refer to Table 64, “Clock Controller switch settings for NTRB53,” on page 224.

**3** Insert the replacement card into the vacated slot and hook the locking devices.

**4** Connect the reference cables (J1 and J2) to the replacement card.

**CAUTION**
Clock-to-Clock cable J3 should never be connected between the old clock (QPC471 or QPC775) and the new clock (NTRB53).

**5** Set the ENB/DIS switch to ENB on the replacement card.

**6** Software enable the card. At the prompt, enter:

| | |
|---|---|
| LD 60 | |
| ENL CC x | Enable clock controller card, where x = 0 or 1 |

**7** Verify that the card is active. At the prompt, enter:

| | |
|---|---|
| SSCK x | Get status of system clock where x = 0 or 1 |
| **** | Exit the overlay |

**8** Switch to the core with the new clock. At the prompt, enter:

```
LD 135
SCPU            Switch CPU
```

***Note:*** Wait two minutes before proceeding to the next step.

**CAUTION**
The following procedure to faceplate disable the active clock controller is potentially service impacting.

**9** Faceplate disable the active clock controller to force the newly installed clock controller to activate.

**10** Disconnect the Clock-to-Clock faceplate cable to J3 of the new clock controller card in the active CPU side. .

**CAUTION**
Active calls will experience noise over local and trunk calls

**11** Verify that the clock controller is active. At the prompt, enter:

```
LD 60
SSCK        Get status of the new system clock, where x = 0 or 1
TRCK PCK    Track primary clock, where x = 0 or 1
RCNT        Resets all alarm counters of all gigital cards
****        Exit the overlay
```

***Note:*** Replacing the clock controller will generate errors on the network equipment. It is recommended that all counters be reset.

**12** To replace the remaining QPC775 or QPC471 clock controller card, tag and disconnect the cables to the card you are removing.

**13** Unhook the locking devices on the card and pull it out of the card cage.

**14** Set the ENB/DIS switch to DIS on the replacement card.

**15** Set the option switches on the replacement card (NTRB53). Refer to Table 64, “Clock Controller switch settings for NTRB53,” on page 224.

**16** Insert the replacement card into the selected slot and hook the locking devices.

**17** Connect the reference cables (J1 and J2) and the clock-to-clock cable (J3) to the replacement card.

**18** Set the ENB/DIS switch to ENB on the replacement card.

**19** Software disable and enable the card. At the prompt, enter:

| | |
|---|---|
| LD 60 | |
| DID CC x | Disable clock controller card, where x=0 or 1 |
| ENL CC x | Enable clock controller card, where x=0 or 1 |

**20** Verify that the card is active. At the prompt, enter:

| | |
|---|---|
| SSCK x | Get status of system clock, where x=0 or 1 |
| **** | Exit the overlay |

***Note:*** Wait two minutes before porceeding to next step.

**21** Activate the new card and verify that it is active. At the prompt enter:

| | |
|---|---|
| LD60 | |
| SWCK | Switch system clock from active to standby |
| SSCK x | Get status of system clock, where x = 0 or 1 |
| TRCK PCK | Track primary clock, where x = 0 or 1 |
| RCNT | Reset alarm counters of all digital cards |
| **** | Exit the overlay |

**22** Set the clock source to the status it was in before the replacement procedure.

**23** Verify clock switch-over and tracking. At the prompt, enter:

| | |
|---|---|
| SWCK | Switch system clock from active to standby |
| SSCK x | Get status of system clock, where x = 0 or 1 |
| **** | Exit the overlay |

# ISL installation

## Contents

The following are the topics in this section:



## ISL configurations

The ISDN Signaling Link (ISL) is used on Meridian 1 PRI/DTI connections. The ISL feature operates in two modes, shared and dedicated.

### Shared mode

The DCHI supports ISDN PRI signaling for both PRI and ISL trunks.

### Dedicated mode

In this mode, the DCHI supports ISL trunks using ISDN PRI signaling. The D-channel communicates with the far end using a dedicated leased line, dial-up modem, or DTI trunk.

## DCHI switch settings

For ISL functions, use the following switch settings for the J2 port:

- RS-232 for 19.2 Kbps and below
- HS (RS-422) for speeds above 19.2 Kbps
- External clock (in Overlay 17) provided by modem, ADM, or ASIM, otherwise DCHI will be running at 64 Kbps
- DTE device configuration

Figure 78 shows the ISL high-speed programming jumper settings for the NT6D11AB, NT6D11AE DCHI, and Figure 79 shows the ISL low-speed programming jumper settings for the NT6D11AB, NT6D11AE/AF DCHI.

**Figure 78**
**NT6D11AB, NT6D11AD DCHI with ISL high-speed programming jumper settings**

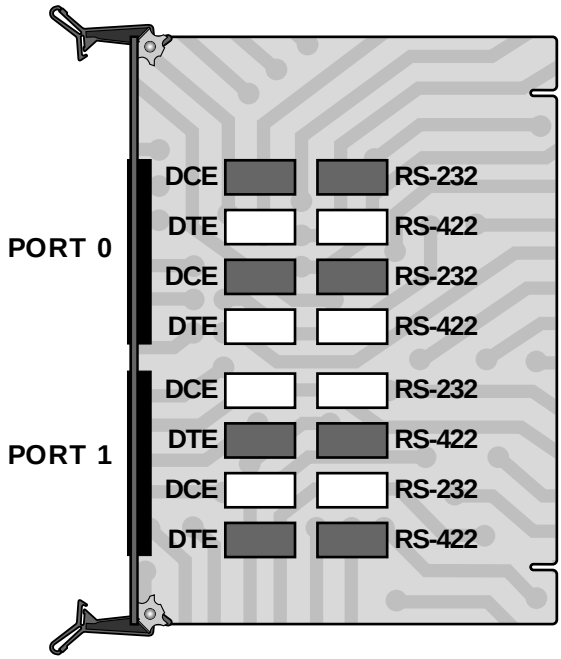

**Figure 79**
**NT6D11AB, NT6D11AD DCHI with ISL low-speed programming jumper settings**

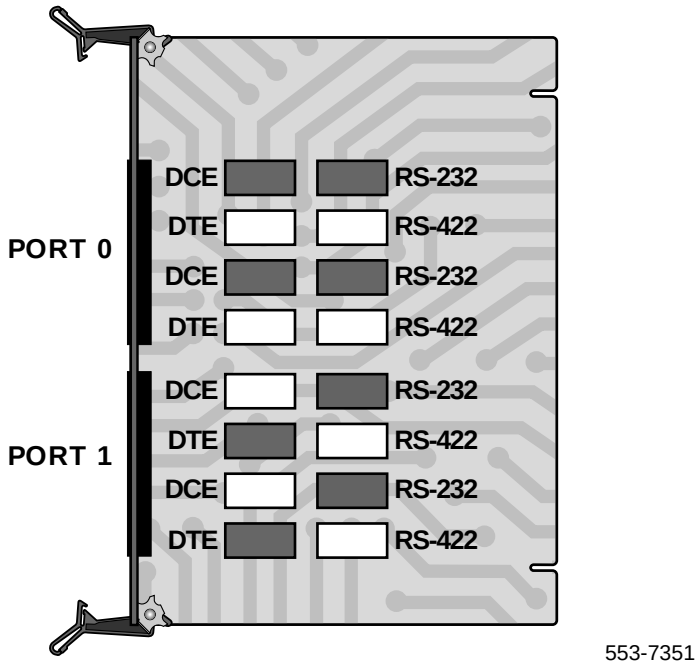


## MSDL switch settings

For ISL functions, use the following switch settings.

- DTE for high speed programming;
- RS-232 for 19.2 Kbps and below;
- External clock (in LD17) provided by modem, ADM, or ASIM, HSDM otherwise DCH runs at 64 Kbps. Refer to Figure 80.

**Figure 80**
**MSDL/ISL settings**

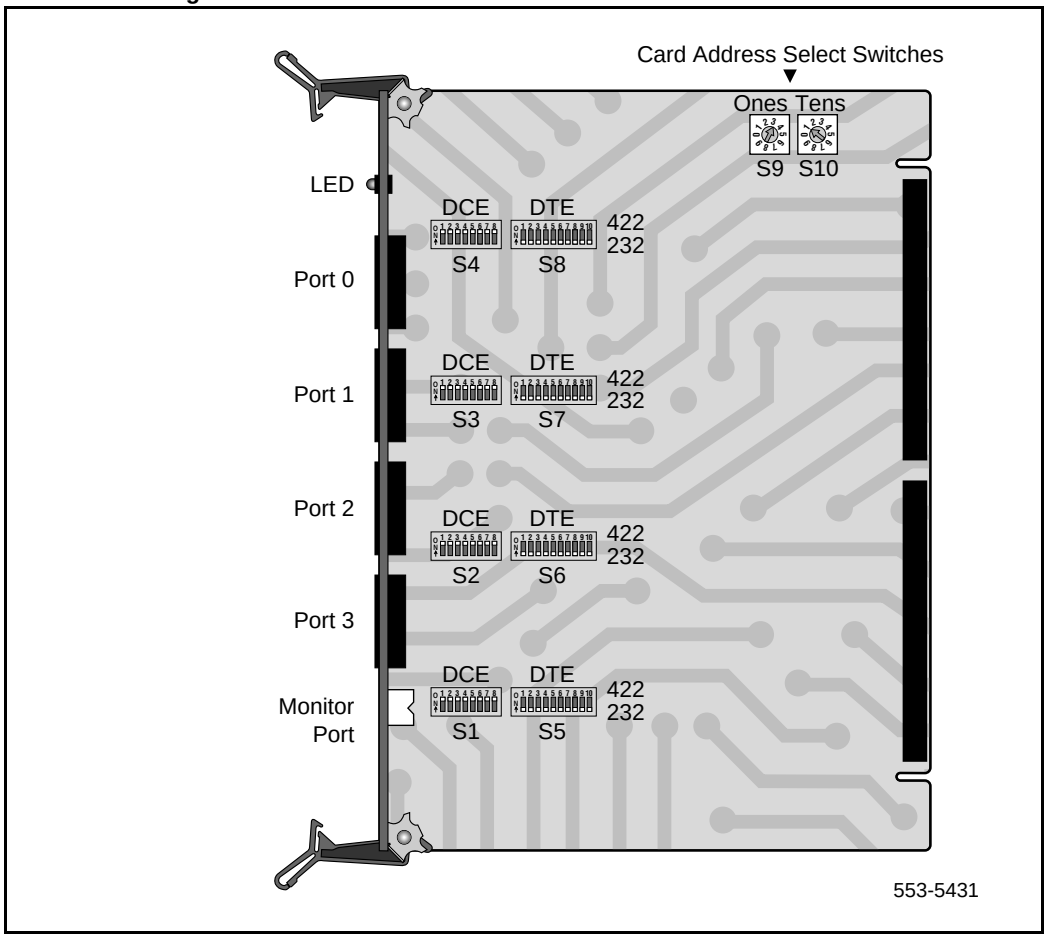


## Shared mode

In shared mode, the D-channel is provided by the DCHI or MSDL card and PRI. The hardware configuration is basically the same as the ISDN PRI D-channel. See Figure 81.

Shared mode is established through service change in LD17, prompt USR, with the response SHA.

In the shared mode, the DCH can share signaling for no more than 382 (T1) or 480 (E1) trunks, including digital and analog.

**Figure 81**
**ISL in shared mode**

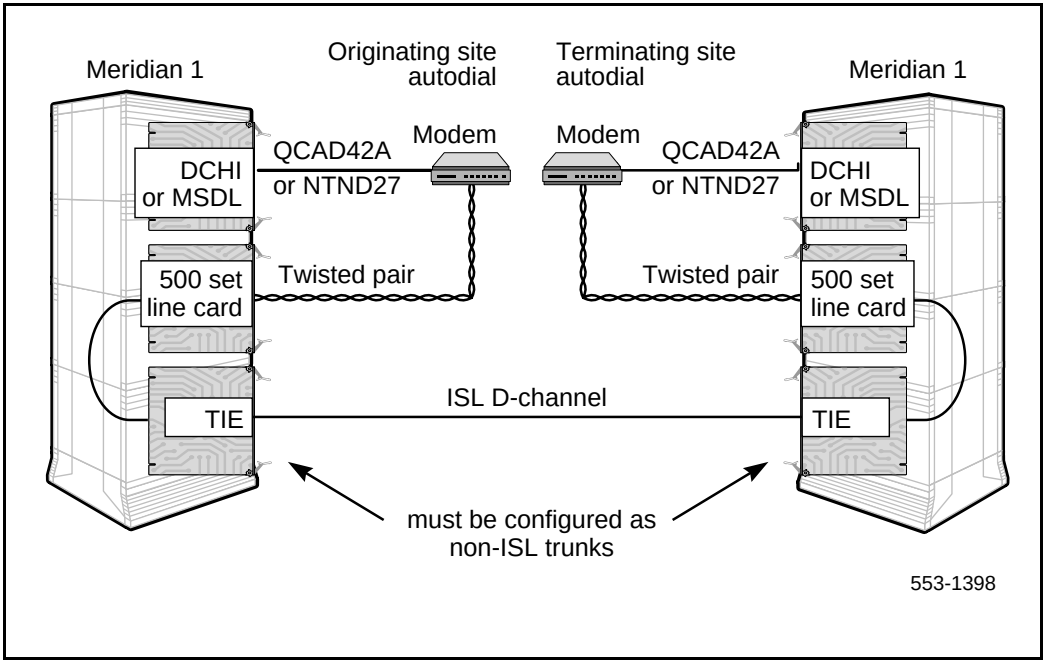


## Dedicated mode using leased line

In this configuration, the D-channel connects the DCHI or MSDL to a modem which communicates with a far-end modem over a dedicated leased line. See Figure 82. A 2400 baud D-channel can support signaling for approximately 382 (T1) or 480 (E1) trunks without non-call associated messages.

Both modems should be set in the synchronous mode.

**Figure 82**
**ISL dedicated mode, using leased line**

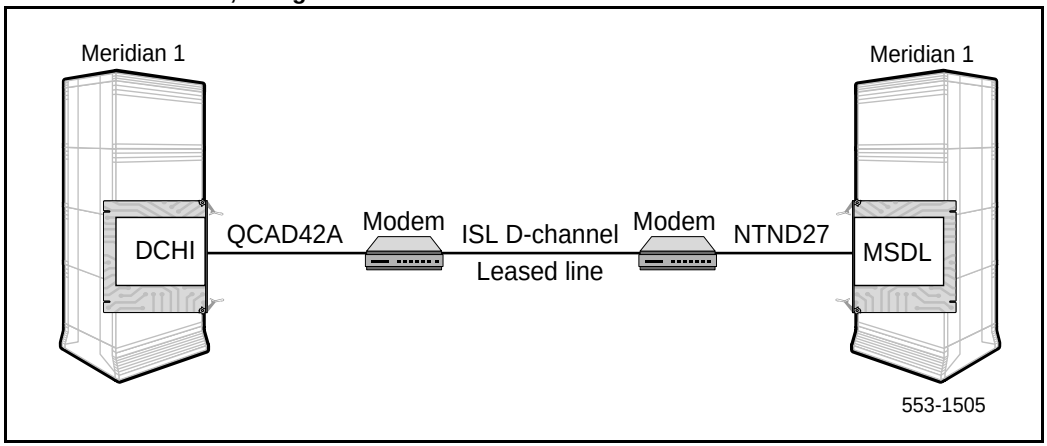


# Dedicated mode using dial-up modem

In this configuration, the DCHI or MSDL is connected to a modem which is connected to a 500 set line card. See Figure 84. The call is connected to the far end through the 500 set-to-TIE trunk path.

To set up the D-channel, program the modem at one end in the auto-dial mode, so it automatically initiates a call to the other end at power up. The auto-dial DN must be coordinated with personnel at the far end switch.

## Install a modem for ISL applications

The modem software and hardware must be installed sequentially. The modem software must be defined before the hardware connection between the modem and Meridian 1 can be made. Within the software installation, either the auto-dial or the auto-answer software can be set up first. Figure 83 shows the hardware configuration between two Meridian 1 PBXs and their corresponding modems.

**Figure 83**
**ISL dedicated mode: using dial-up Hayes Smartmodem 2400**

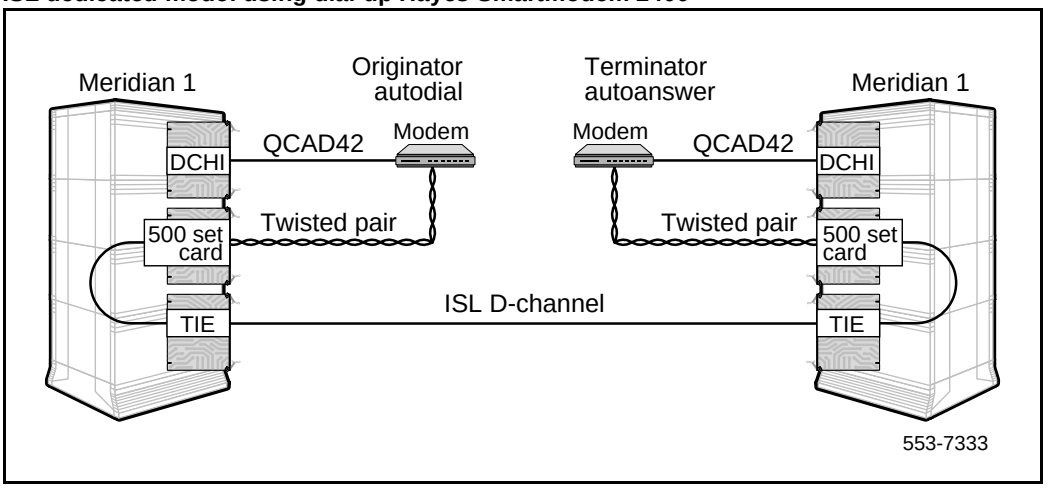


Examples of parameters used for actual auto-answer and auto-dial sites are shown in the following tables (note that the Hayes Smartmodem has been used.) Table 65 shows the active and stored profiles of the auto-dial site (or the originating modem). Table 66 shows the active and stored profiles of the auto-answer site (or the terminating modem). The Hayes Smartmodem User's Guide contains explanations of the parameters used in Table 65 and Table 66.

After the software parameters have been set up, the JP1 jumpers behind the front faceplate of the Hayes Smartmodem must be dumb strapped on both modems. Then see the Hayes Smartmodem Getting Started Guide to set up the hardware between the Meridian 1 and the modem.

**Table 65**
**Active and stored profiles of the autodial or originating modem**

| **Active profile:** |
|---|
| B1 E0 L2 M1 Q1 V1 X4 Y0 &C1 &D0 &G0 &J0 &L0 &P0 &Q2 &R0 &S0 &X0 &Y0<br>S00:000 S01:000 S02:043 S03:013 S04:010 S05:008 S06:002 S07:030<br>S08:002 S09:006 S10:014 S12:050 S14:ACH S16:00H S18:000 S21:20H<br>S22:76H S23:15H S25:005 S26:001 S27:42H |
| **Stored profile 0:** |
| B1 E0 L2 M1 Q1 V1 X4 Y0 &C1 &D0 &G0 &J0 &L0 &P0 &Q2 &R0 &S0 &X0<br>S00:000 S14:ACH S18:000 S21:20H S22:76H S23:17H S25:005 S26:001<br>S27:42H<br><br>**Stored profile 1:** |
| B1 E1 L2 M1 Q0 V1 X4 Y0 &C0 &D0 &G0 &J0 &L0 &P0 &Q0 &R0 &S0 &X0<br>S00:00 S14:AAH S18:000 S21:00H S22:76H S23:17H S25:005 S26:001<br>S27:40H |
| **Telephone numbers:** |
| &Z0=ATDT7414011<br>&Z1=<br>&Z2=<br>&Z3= |

**Table 66**
**Active and stored profiles of the auto answer or terminating modem**

| **Active profile:** |
|---|
| B1 E0 L2 M1 Q1 V1 X4 Y0 &C1 &D2 &G0 &J0 &L0 &P0 &Q1 &R0 &S1 &X2 &Y0<br>S00:001 S01:000 S02:043 S03:013 S04:010 S05:008 S06:002 S07:030<br>S08:002 S09:006 S10:014 S12:050 S14:ACH S16:00H S18:000 S21:70H<br>S22:76H S23:15H S25:005 S26:001 S27:61H |
| **Stored profile 0:** |
| B1 E0 L2 M1 Q1 V1 X4 Y0 &C1 &D2 &G0 &J0 &L0 &P0 &Q1 &R0 &S1 &X2<br>S00:001 S14:ACH S18:000 S21:70H S22:76H S23:17H S25:005 S26:001<br>S27:61H<br><br>**Stored profile 1:** |
| B1 E1 L2 M1 Q0 V1 X4 Y0 &C0 &D0 &G0 &J0 &L0 &P0 &Q0 &R0 &S0 &X0<br>S00:000 S14:AAH S18:000 S21:00H S22:76H S23:17H S25:005 S26:001<br>S27:40H |
| **Telephone numbers:** |
| &Z0=<br>&Z1=<br>&Z2=<br>&Z3= |

**Figure 84**
**ISL dedicated mode, using dial-up Hayes Smartmodem 2400**

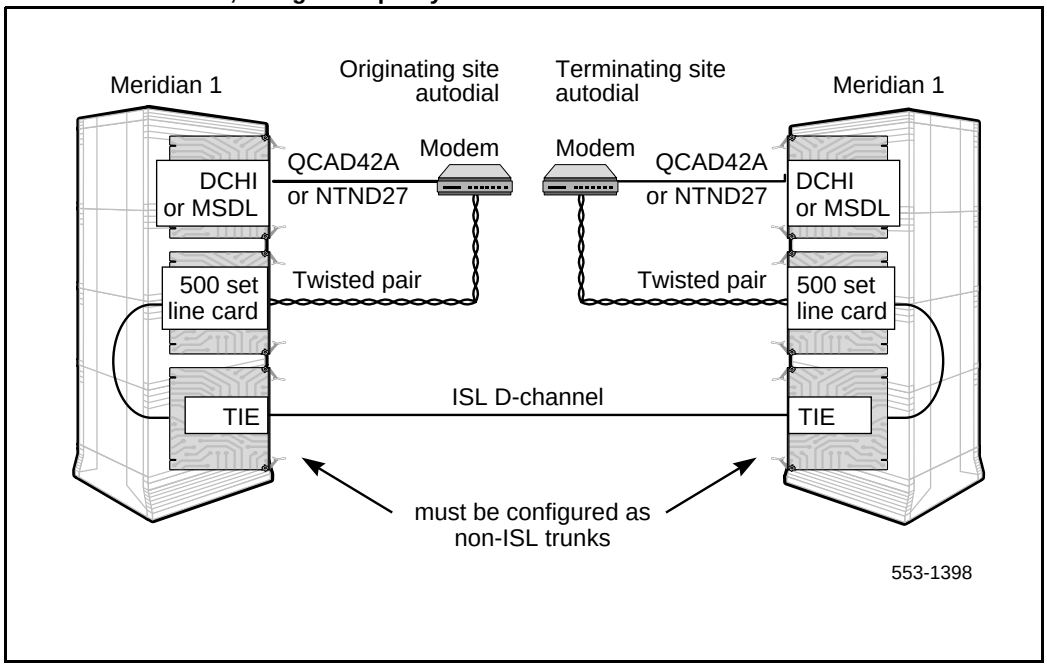


## Dedicated mode using PRI/DTI trunks

In this configuration, the DCHI or MSDL is connected to an High Speed Data Module (HSDM) or Asynchronous/Synchronous Interface Module (ASIM). See Figure 85. The HSDM or ASIM is connected to a Data Line Card (DLC). The call is then connected to the far end through the DLC to DTI trunk path.

To establish the D-channel in this configuration, set up the HSDM or ASIM at one end in hot line mode. The hot line DN must be coordinated with personnel at the far end, then programmed in LD11. The preprogrammed hot line DN is dialed by the Meridian 1. If the call cannot be established, the Meridian 1 continues to dial the hot line number continuously until the call is connected.

Set the HSDM or ASIM must be in synchronous mode. A data rate of 9.6 Kbps is recommended because it provides internal error detection and correction. The following data rates are also supported: 1.2 Kbps, 2.4 Kbps, 3.6 Kbps, 4.8 Kbps, 7.2 Kbps, 14.4 Kbps, 19.2 Kbps, 38.4 Kbps, and 56 Kbps for ASIM. The High Speed Data Module (HSDM) supports 64 Kbps.

***Note 1:*** This configuration is the least reliable due to the lockup problems inherent in Smart Modems from power splices and noisy lines. To increase the reliability on this configuration, a constant power source can be used when powering the modems. Also ensure that the TIE lines meet data grade specifications.

***Note 2:*** Nortel Networks takes no responsibility for ISL D-channel outages due to modem lockup.

**Figure 85**
**ISL dedicated mode: using PRI/DTI trunk**

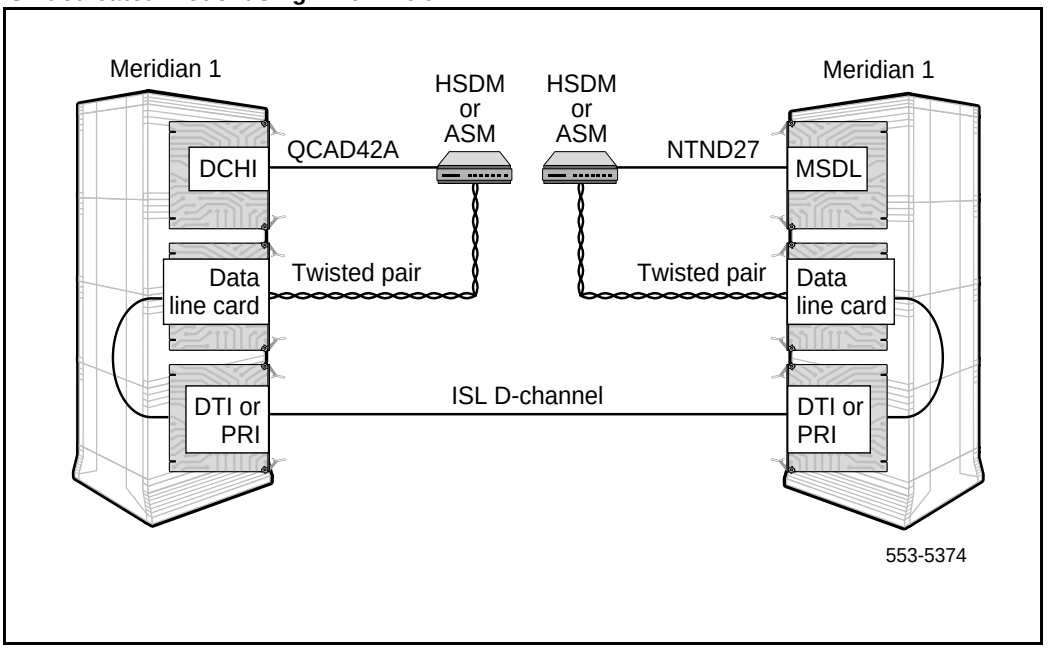

## QMT11 switch settings

If using the QMT11 ASIM, set the dip switches, located on top of the unit under the flip-up, as follows:

- Hotline, On; See Note 1.
- Forced DTR, On; See Note 2.
- FDX (full duplex), On
- SYNC, On
- INTernal CLK, On
- Modem/Network, Modem
- Auto Answer, On
- Loopback, Off

***Note 1:*** Set only one side of the interface to originate the hot line.

***Note 2:*** Forced Data Terminal Ready (DTR) automatically reinitiates a dropped hot line call.

## QMT8 switch settings

If the QMT8 Asynchronous Data Module (ADM) is used, set the switches as follows:

| **Switch 1:** | **Switch 3:** | | **Switch 4:** | |
|---|---|---|---|---|
| set to zeros (no VFDN) | 1 | not used | 1 | on |
| | 2 | not used | 2 | on (hot line*) |
| | 3 | FDX (full duplex) | 3 | off (DTR-data terminal ready-required) |
| | 4 | modem | 4 | on (synchronous) U5 and U7 must be jumpered |
| | 5 | internal clock | | |
| | 6 | no echo | | |
| | 7 | auto answer | | |
| | 8 | off (no loopback) | | |
| | | | * Only one side of the interface should be set to originate the hot line. | |

## QMT21C switch settings

If using the QMT21 HSDM, set the dip switches, located on top of the unit under the flip-up, as follows.

- Hotline, On; See Note 1.
- Forced DTR, On; See Note 2.
- FDX (full duplex), On
- SYNC, On
- INTernal CLK, On
- Modem/Network, Modem
- Auto Answer, On
- Loopback, Off

***Note 1:*** Set only one side of the interface to originate the hot line.

***Note 2:*** Forced Data Terminal Ready (DTR) automatically reinitiates a dropped hot line call.

# ISL installation

Use Procedure 24 to install ISL in dedicated mode. Use Procedure 25 to install ISL in shared mode.

Modem paths must have individual configurations: route data blocks, trunks, and routes.

## Install ISL in dedicated mode (digital and analog)

### Task summary list

The following is a summary of the tasks in this section:

**1** Install ISL in dedicated mode

DTI or PRI should already be up and running.

**Procedure 24**
**Install ISL in dedicated mode**

**1** In LD17, configure ISL for dedicated mode.
USR = ISLD
ISLM = Number of trunks handled by this D-channel (1-382)

**2** In LD16, configure the Route Data Block to map out the software parameters for these trunks.

**3** Install the modem with leased line functionality.

**4** In LD14, reassign old trunks to the routes just built in LD16.

**5** In LD16, out the old DTI route. A separate Route Data Block should be built for Leased Line, or to accommodate the dialing plan for a dedicated modem.

## Install ISL in shared mode

### Task summary list

The following is a summary of the tasks in this section:

**1** Install ISL in shared mode

DTI or PRI should already be up and running.

**Procedure 25**
**Install ISL in shared mode**

**1** In LD14, remove the PRI trunks.

**2** In LD17, configure ISL for dedicated mode.
USR = SHA
ISLM = Number of trunks handled by this D-channel (1-382)

**3** In LD16, build a PRI route data block. This is the same route you just removed in step 1.
ISDN = YES

**4** In LD16 build another route data block to correspond to the IAS routes.

**5** In LD14, assign trunks to the newly configured routes.

# Echo canceller installation

## Contents

The following are the topics in this section:



## Introduction

Echo cancellers are required only in cases where satellite transmission is being used. The echo canceller detects the length of the loop, and cancels out transmission reflections (which result in audible echoes of voices on satellite-carried calls).

## Echo canceller operating parameters

The operational parameters of the echo canceller must be:

- Data transfer rate: 4800 baud
- System unit number: 1
- Display time-out: active
- Failures before alarm: 3

# Echo canceller initialization procedures

Each of the 24 channels on the echo canceller must be initialized as shown here:

- Bypass: OFF
- Off-hook: ON
- Canceller only: OFF
- H reset: OFF
- H hold: OFF

# PRI to Echo canceller pin assignments

The echo canceller is controlled by an RS-232 port on the PRI circuit pack. The following tables give the echo canceller pin assignments, operating parameters and initialization procedures.

See Table 67 for PRI-to-Echo canceller pin assignments; refer to Figure 86 for a PRI-to-Echo-canceller cabling schematic.

**Table 67**
**PRI-to-Echo canceller – pin assignments (Part 1 of 2)**

| Signal | PRI pin | Echo canceller pin | EIA RS-232-C circuit designator |
|---|---|---|---|
| TXD (Transmitted Data) | 5 | 2 | BA |
| RXD (Received Data) | 2 | 3 | BB |
| RTS (Request to Send) | — | 4 | CC |
| CTS (Clear to Send) | — | 5 | CB |

**Table 67**
**PRI-to-Echo canceller – pin assignments (Part 2 of 2)**

| | | | |
|---|---|---|---|
| Common Return (signal ground) | 10 | 7 | AB |
| DCD (received line signal detector) | 1 | 8 | CF |
| DTR (data terminal ready) | 4 | 20 | CD |

# Electromagnetic Interference

The electromagnetic interference (EMI) filter assembly for PRI is PO643763. The Meridian 1 meets FCC Part 15, Subpart J, Class A requirements regarding EMI. In order to accomplish this, the SDI cables must exit the cabinet through EMI filters on the I/O panel. This procedure depends on the Meridian 1 cabinet type.

**Figure 86**
**PRI to echo canceller cabling**

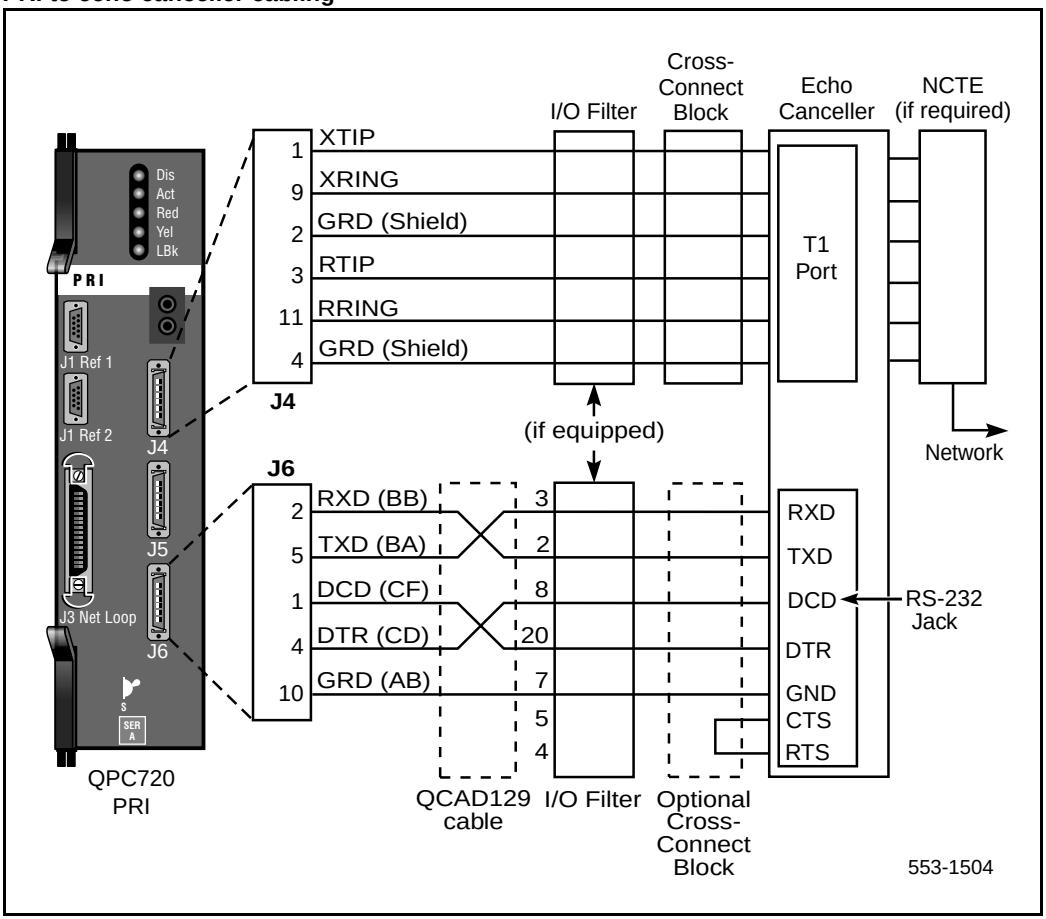

# Non-standard cables

## Contents

The following are the topics in this section:

# Introduction

This section provides information required to build Meridian 1 systems cables of non-standard lengths for ISDN PRI applications.

# NT5K40AA, NT5K41AA, NT5K86AA

These cables are used to transport the 2Mb digital signal from the faceplate connector on the PRI card to the Line Terminating Equipment interface.

- Standard lengths:
  - — NT5K40AA - 4 m (13 ft.)
  - — NT5K41AA - 8 m (26 ft.)
  - — NT5K86AA - 12m (39 ft.)
- Construction - 75 ohm dual co-axial type with solid inner conductor and braided shield.
- J1 Connector - 15-pin, male, subminiature D with jack-screws
- J2 Connector - 75 ohm BNC crimp plug
- J3 Connector - 75 ohm BNC crimp plug

**Table 68**
**NT5K40AA, NT5K41AA, NT5K86AA wire list**

| From (pack end) | To (I/O end) | Signal |
|---|---|---|
| J1-1 | J2 Inner Conductor | XTIP (transmit) |
| J1-9 | J2 Shield | XRING (transmit) |
| J1-3 | J3 Inner Conductor | RTIP (receive) |
| J1-11 | J3 Shield | RRING (receive) |
| J1-9 | J3 Shield | FRAME GROUND |

# NT8D7206, NT8D7207

This cable is used to transport the 2Mb/s digital signal from the PRI pack to the I/O assembly located at the cabinet bulkhead.

- Standard length -
  3.05 m (10 ft.) for SL-1 system Options 51, 61, 71, NT, XT
- Construction - 24 AWG, stranded foil-shielded twisted pairs
- P1 Connector (Pack end) - 9-pin, male, subminiature D, with jack-screws
- P2 Connector (I/O Panel end) - 9-pin, male, subminiature D, with jack-screws

**Table 69**
**NT8D7206, NT8D7207 wire list**

| Color | From (pack end) | To (I/O end) | Signal |
|---|---|---|---|
| White | P1-1 | P2-6 | XTIP (transmit) |
| Black | P1-9 | P2-7 | XRING (transmit) |
| Green Shield | nc | P2-CASE P2-9 | GROUND |
| Red | P1-3 | P2-2 | RTIP (receive) |
| Black | P1-11 | P2-3 | RRING (receive) |
| Red Shield | nc | P2-CASE P2-5 | GROUND |

# QCAD128

This cable transports the T1 signal from the PRI pack to the I/O panel.

- Standard length - 10 ft. (3.05 m)
- Construction - 15-conductor ribbon, 28 AWG (0.321 mm), stranded
- P1 Connector - 15-pin, male, subminiature D, with jack-screws
- P2 Connector - 15-pin, male, subminiature D, with jack-screws

See Table 70.

**Table 70**
**QCAD128 wire list**

| From | To | Signal |
|---|---|---|
| P1-1 | P2-1 | XTIP (transmit tip) to telephone company |
| P1-2 | P2-2 | GND (ground) |
| P1-3 | P2-3 | RTIP (receive tip) from telephone company |
| P1-4 | P2-4 | GND (ground) |
| P1-5 | P2-5 | |
| P1-6 | P2-6 | |
| P1-7 | P2-7 | |
| P1-8 | P2-8 | |
| P1-9 | P2-9 | XRING (transmit ring) to telephone company |
| P1-10 | P2-10 | |
| P1-11 | P2-11 | RRING (receive ring) from telephone company |
| P1-12 | P2-12 | |
| P1-13 | P2-13 | |
| P1-14 | P2-14 | |
| P1-15 | P2-15 | |

# QCAD129

This cable is used to connect the RS-232-C interface between an echo canceller and the PRI pack.

- Standard length - 2.1 m (7 ft.)
- Construction - 22 AWG (0.644 mm), stranded
- P1 Connector - 15-pin, male, subminiature D, with jack-screws
- P2 connector - 25-pin, male, subminiature D, with jack-screws

**Table 71**
**QCAD129 wire list**

| PRI Signal | From | To | Echo Canceller Signal |
|---|---|---|---|
| DCD | P1-1 | P2-20 | DTR |
| RXD | P1-2 | P2-2 | TXD |
| DTR | P1-4 | P2-8 | DCD |
| TXD | P1-5 | P2-3 | RXD |
| GND | P1-10 | P2-7 | GND |
| RTS | P1-12 | P2-4 | |
| CTS | P1-9 | P2-5 | |
| TPENB (Test Port Enable Bar) | P1-15 | nc | |

# QCAD133

For cabinets **with** an I/O filter assembly, this cable transports the T1 signal from the I/O filter to the Network Channel Terminating Equipment (NCTE) telephone company interface. See Table 72.

For cabinets **without** an I/O filter assembly, this cable transports the T1 signal from the QPC720 PRI pack to the NCTE telephone company interface.

- Standard length - 50 ft (15.3 m)
- Construction - Individually foil-shielded, twisted pairs, 24 AWG (0.511 mm), stranded
- P1 Connector - 15-pin, female, subminiature D with jack-screws
- P2 Connector - 15-pin, male, subminiature D, with slide-latch (optional spring-latch loose-packed with cable assembly)

**Table 72**
**QCAD133 wire list**

| Color | From | To | PRI signal |
|---|---|---|---|
| WHITE | P1-1 | P2-1 | XTIP (transmit tip) to telephone company |
| BLACK | P1-9 | P2-9 | XRING (transmit ring) to telephone company |
| GRN SHLD | P1-2 | nc | GND (ground) |
| RED | P1-3 | P2-3 | RTIP (receive tip) from telephone company |
| BLACK | P1-11 | P2-11 | RRING (receive ring) from telephone company |
| RED SHLD | P1-4 | nc | GND (ground) |

# NT8D7205

This cable is used to transport the 2Mb digital signal from the I/O panel at the cabinet bulkhead to the Network Channel Terminating Equipment (NCTE) telephone company interface.

- Standard length - 15.3 m (50 ft)
- Construction - Individually foil-shielded, twisted pairs, 24 AWG (0.511 mm), stranded
- P1 Connector - 9-pin, female, subminiature D with jack-screws
- P2 Connector - 9-pin, male, subminiature D, with jack screws

**Table 73**
**NT8D7205 wire list**

| Color | From (pack end) | To (I/O end) | Signal |
|---|---|---|---|
| White | P1-6 | P2-6 | XTIP (transmit) |
| Black | P1-7 | P2-7 | XRING (transmit) |
| Green Shield | P1-9 | nc | GROUND |
| Red | P1-2 | P2-2 | RTIP (receive) |
| Black | P1-3 | P2-3 | RRING (receive) |
| Red Shield | P1-5 | nc | GROUND |

# QCAD328

This cable is used to connect the PRI pack to the D-channel interface card, either the QPC757 or NT6D11AB DCHI. There are two types of QCAD328 cables: QCAD328A and QCAD328B.

- QCAD328A - 1.8 m (6 ft)
- QCAD328B - 5.5 m (18 ft)
- QCAD328C - 10.67 m (35 ft)
- QCAD328D - 15.24 m (50 ft)
- Construction - 24 AWG (0.511 mm), stranded

- P1 Connector - 25-pin male, subminiature D
- P2 Connector - 15-pin male, subminiature D

**Table 74**
**QCAD328 wire list**

| From | To | Signal |
|---|---|---|
| P1-2 | P2-2 | SDA+ |
| P1-13 | P2-10 | SDB- |
| P1-20 | P2-15 | TR |
| P1-15 | P2-9 | STA+ |
| P1-14 | P2-11 | STB- |
| P1-3 | P2-4 | RDA+ |
| P1-16 | P2-12 | RDB- |
| P1-17 | P2-5 | RTA+ |
| P1-12 | P2-13 | RTB- |
| P1-8 | P2-8 | RR |
| P1-5 | P1-8 | CS |
| P1-7 | P1-1 | SG |
| P1-1 | P2-1 | GND |

## NT8D74 Clock Controller to InterGroup cable

This cable connects the QPC471 Clock Controller card to the NT8D36 InterGroup Module.

This cable is available in the following lengths:

- NT8D74AC 1.2 m (4 ft)
- NT8D74AD 1.8 m (6 ft)
- NT8D74AE 2.4 m (8 ft)
- NT8D74AF (QCAD110B) 3 m (10 ft)
- NT8D74AJ 4.8 m (16 ft)

## NT8D75 Clock Controller to Clock Controller cable

This cable interconnects QPC471 Clock Controller cards.

This cable is available in the following lengths:

- NT8D75AC 1.2 m (4 ft)
- NT8D75AD 1.8 m (6 ft)
- QCAD125 3 m (10 ft)

## NT8D79 PRI/DTI to Clock Controller cable

This cable connects the PRI/DTI card to the QPC471 Clock Controller card.

This cable is available in the following lengths:

- NT8D79AB 0.6 m (2 ft)
- NT8D79AC 1.2 m (4 ft)
- NT8D79AD 1.8 m (6 ft)
- NT8D79AE 2.4 m (8 ft)
- NT8D79AF (QCAD130) 3 m (10 ft)

## NT8D83 PRI/DTI to I/O cable

This cable connects the PRI/DTI card (T1 port) to the I/O connector panel.

This cable is available in the following lengths:

- NT8D83AC 1.2 m (4 ft)
- NT8D83AD 1.8 m (6 ft)

## NT8D85 Network to PE cable

This cable connects the following:

- QPC581 CMA card to QPC581 CMA card in dual CPU configuration
- QPC414 Network card to PRI/DTI card
- QPC414 Network card to QPC659 Dual Loop Peripheral Buffer card (for internal cabling only)
- QPC659 Dual Loop Peripheral Buffer card to QPC659 Dual Loop Peripheral Buffer card when connecting two NT8D13 PE Modules together

This cable is available in the following lengths:

- NT8D85AB 0.6 m (2 ft)
- NT8D85AC 1.2 m (4 ft)
- NT8D85AZ 1.5 m (5 ft)
- NT8D85AD 1.8 m (6 ft)
- NT8D85AE 2.4 m (8 ft)
- NT8D85AF 3 m (10 ft)
- NT8D85AJ 4.8 m (16 ft)
- NT8D85AL 6 m (20 ft)
- NT8D85AP 7.6 m (25 ft)
- NT8D85AV 13.7 m (45 ft)

## NT8D86 Network to I/O cable

This cable connects the following to the I/O connector panel:

- QPC414 Network card
- PRI/DTI card

- QPC659 Dual Loop Peripheral Buffer card
- NT8D47 RPE

This cable is available in the following lengths:

- NT8D86AC 1.5 m (5 ft)
- NT8D86AD 1.8 m (6 ft)

## NT8D97AX PRI/DTI I/O to MDF cable

This cable connects the PRI/DTI card to the MDF through the I/O connector panel. It is 15.2 m (50 ft) long.

## NT9J93AD PRI/DTI Echo Canceller to I/O cable

This cable connects the PRI/DTI Echo Canceller port to the I/O connector panel. It is 1.8 m (6 ft) long.

## NTND26 PRI to MSDL cables

These cables connect the MSDL card to the PRI cards.

- NTND26AA 6 feet
- NTND26AB 18 feet
- NTND26AC 35 feet
- NTND26AD 50 feet

## NTND27 MSDL to I/O panel cables

These cables connect the MSDL card to the I/O panel.

- NTND27 6 ft

## NTND98 PRI to I/O panel cables

These cables connect the PRI card to the I/O panel.

- NTND98 6 ft

Meridian 1

# ISDN Primary Rate Interface

Installation


Information is subject to change without notice. Nortel Networks reserves the right to make changes in design or components as progress in engineering and manufacturing may warrant. This equipment has been tested and found to comply with the limits for a Class A digital device pursuant to Part 15 of the FCC rules, and the radio interference regulations of Industry Canada. These limits are designed to provide reasonable protection against harmful interference when the equipment is operated in a commercial environment. This equipment generates, uses and can radiate radio frequency energy, and if not installed and used in accordance with the instruction manual, may cause harmful interference to radio communications. Operation of this equipment in a residential area is likely to cause harmful interference in which case the user will be required to correct the interference at their own expense.

Publication number: 553-2901-201
Document release: Standard 7.00
Date: January 2002
Printed in Canada

NORTEL NETWORKS™