Avaya Virtual Services Platform 7000 Series Installation

Release 10.1
NN47202-300, 02.01
February 2012

© 2012 Avaya Inc.

All Rights Reserved.

Notice

While reasonable efforts have been made to ensure that the information in this document is complete and accurate at the time of printing, Avaya assumes no liability for any errors. Avaya reserves the right to make changes and corrections to the information in this document without the obligation to notify any person or organization of such changes.

Documentation disclaimer

“Documentation” means information published by Avaya in varying mediums which may include product information, operating instructions and performance specifications that Avaya generally makes available to users of its products. Documentation does not include marketing materials. Avaya shall not be responsible for any modifications, additions, or deletions to the original published version of documentation unless such modifications, additions, or deletions were performed by Avaya. End User agrees to indemnify and hold harmless Avaya, Avaya's agents, servants and employees against all claims, lawsuits, demands and judgments arising out of, or in connection with, subsequent modifications, additions or deletions to this documentation, to the extent made by End User.

Link disclaimer

Avaya is not responsible for the contents or reliability of any linked Web sites referenced within this site or documentation provided by Avaya. Avaya is not responsible for the accuracy of any information, statement or content provided on these sites and does not necessarily endorse the products, services, or information described or offered within them. Avaya does not guarantee that these links will work all the time and has no control over the availability of the linked pages.

Warranty

Avaya provides a limited warranty on its Hardware and Software (“Product(s)”). Refer to your sales agreement to establish the terms of the limited warranty. In addition, Avaya’s standard warranty language, as well as information regarding support for this Product while under warranty is available to Avaya customers and other parties through the Avaya Support Web site: http://support.avaya.com. Please note that if you acquired the Product(s) from an authorized Avaya reseller outside of the United States and Canada, the warranty is provided to you by said Avaya reseller and not by Avaya.

Licenses

THE SOFTWARE LICENSE TERMS AVAILABLE ON THE AVAYA WEBSITE, HTTP://SUPPORT.AVAYA.COM/LICENSEINFO/ ARE APPLICABLE TO ANYONE WHO DOWNLOADS, USES AND/OR INSTALLS AVAYA SOFTWARE, PURCHASED FROM AVAYA INC., ANY AVAYA AFFILIATE, OR AN AUTHORIZED AVAYA RESELLER (AS APPLICABLE) UNDER A COMMERCIAL AGREEMENT WITH AVAYA OR AN AUTHORIZED AVAYA RESELLER. UNLESS OTHERWISE AGREED TO BY AVAYA IN WRITING, AVAYA DOES NOT EXTEND THIS LICENSE IF THE SOFTWARE WAS OBTAINED FROM ANYONE OTHER THAN AVAYA, AN AVAYA AFFILIATE OR AN AVAYA AUTHORIZED RESELLER; AVAYA RESERVES THE RIGHT TO TAKE LEGAL ACTION AGAINST YOU AND ANYONE ELSE USING OR SELLING THE SOFTWARE WITHOUT A LICENSE. BY INSTALLING, DOWNLOADING OR USING THE SOFTWARE, OR AUTHORIZING OTHERS TO DO SO, YOU, ON BEHALF OF YOURSELF AND THE ENTITY FOR WHOM YOU ARE INSTALLING, DOWNLOADING OR USING THE SOFTWARE (HEREINAFTER REFERRED TO INTERCHANGEABLY AS “YOU” AND “END USER”), AGREE TO THESE TERMS AND CONDITIONS AND CREATE A BINDING CONTRACT BETWEEN YOU AND AVAYA INC. OR THE APPLICABLE AVAYA AFFILIATE (“AVAYA”).

Copyright

Except where expressly stated otherwise, no use should be made of materials on this site, the Documentation, Software, or Hardware provided by Avaya. All content on this site, the documentation and the Product provided by Avaya including the selection, arrangement and design of the content is owned either by Avaya or its licensors and is protected by copyright and other intellectual property laws including the sui generis rights relating to the protection of databases. You may not modify, copy, reproduce, republish, upload, post, transmit or distribute in any way any content, in whole or in part, including any code and software unless expressly authorized by Avaya. Unauthorized reproduction, transmission, dissemination, storage, and or use without the express written consent of Avaya can be a criminal, as well as a civil offense under the applicable law.

Third-party components

Certain software programs or portions thereof included in the Product may contain software distributed under third party agreements (“Third Party Components”), which may contain terms that expand or limit rights to use certain portions of the Product (“Third Party Terms”). Information regarding distributed Linux OS source code (for those Products that have distributed the Linux OS source code), and identifying the copyright holders of the Third Party Components and the Third Party Terms that apply to them is available on the Avaya Support Web site: http://support.avaya.com/Copyright.

Trademarks

The trademarks, logos and service marks (“Marks”) displayed in this site, the Documentation and Product(s) provided by Avaya are the registered or unregistered Marks of Avaya, its affiliates, or other third parties. Users are not permitted to use such Marks without prior written consent from Avaya or such third party which may own the Mark. Nothing contained in this site, the Documentation and Product(s) should be construed as granting, by implication, estoppel, or otherwise, any license or right in and to the Marks without the express written permission of Avaya or the applicable third party.

Avaya is a registered trademark of Avaya Inc.

All non-Avaya trademarks are the property of their respective owners, and “Linux” is a registered trademark of Linus Torvalds.

Downloading Documentation

For the most current versions of Documentation, see the Avaya Support Web site: http://support.avaya.com.

Contact Avaya Support

Avaya provides a telephone number for you to use to report problems or to ask questions about your Product. The support telephone number is 1-800-242-2121 in the United States. For additional support telephone numbers, see the Avaya Web site: http://support.avaya.com.

Contents

Chapter 1: Purpose of this document 5
Chapter 2: New in this release 7
Features 7
Media Dependent Adapter 7
Fabric Interconnect 7
Chapter 3: Safety Precautions 9
Safety messages 9
Chapter 4: Installation preparation 11
Environmental requirements 11
Verifying environmental suitability 12
Power specifications 12
Cooling fans and power supplies 13
Installing the fan trays and power supply 13
Power connections 17
AC power connections 17
Connecting AC power 19
DC power connections 20
Connecting DC power 21
Chapter 5: Switch installation 23
Switch placement options 23
Installing the switch in an equipment rack 24
Installing optional four post rack mount brackets 27
Checking LEDs to verify switch installation 32
Chapter 6: Fabric Interconnect 37
Fabric Interconnect stacking 37
Fabric Interconnect configurations 38
Installing Fabric Interconnect cables 41
Chapter 7: Preparations for network connectivity 45
Console and management connections 45
Small form factor pluggable transceivers 47
SFP port LEDs 49
Installing SFP transceivers 50
Media Dependent Adapter 51
Installing an MDA 52
Chapter 8: How to get help 55
Customer service 55
Appendix A: Hardware reliability 57

Chapter 1: Purpose of this document

This document provides conceptual information and installation procedures for Avaya Virtual Services Platform 7000 Series hardware.

Chapter 2: New in this release

The following sections indicate what's new in this document for VSP 7000 Release 10.1.

Features

See the following sections for information about feature changes.

Media Dependent Adapter

A Media Dependent Adapter (MDA) is a detachable module that you can insert into the front of the switch chassis. The VSP 7000 Series provides 24 fixed ports, and supports the use of an MDA which provides eight additional ports on each unit.

- Media Dependent Adapter on page 51
- Installing an MDA on page 52

Fabric Interconnect

The VSP 7000 Series supports Fabric Interconnect (FI) stacking. You can Fabric Interconnect up to eight VSP 7000 Series switches, providing connectivity for up to 256 ports. Fabric Interconnect allows for flexible, scalable, and redundant deployments of multiple units. Each switch has a pair of FI-up and FI-down ports. You can connect switch units using a pair of FI ports, and FI cables. Once adjacency is established across units, an FI stack is referred to as a virtual fabric or stack. You can efficiently manage a virtual fabric as a single unit.

- Fabric Interconnect stacking on page 37
- Fabric Interconnect configurations on page 38

Chapter 3: Safety Precautions

Safety messages

Safety messages are an important part of the technical documentation. The messages alert you to hazards to personnel and equipment and provide guidance for the safe operation of your equipment. Failure to comply with the safety messages could result in equipment damage and personal injury.

Following are the most common types of safety messages.

Warning:

Installation must be performed by qualified personnel only. Read and follow all warning notices and instructions marked on the product or included in the documentation.

Voltage:

This equipment relies on the building's installation for overcurrent protection. Ensure that a fuse or circuit breaker no larger than 120 VAC, 15 A U.S. (240 VAC, 16 A International) is used on the phase conductors.

Caution:

This device is a Class A product. In a domestic environment, this device can cause radio interference, in which case the user may be required to take appropriate measures.

Caution:

When mounting this device in a rack, do not stack units directly on top of one another in the rack. Each unit must be secured to the rack with appropriate mounting brackets. Mounting brackets are not designed to support multiple units.

Voltage:

Use only power cords that have a grounding path. Without a proper ground, a person who touches the switch is in danger of receiving an electrical shock. Lack of a grounding path to the switch can result in excessive emissions.

Warning:

Disconnecting the power cord is the only way to turn off power to this device. Always connect the power cord in a location that can be reached quickly and safely in case of an emergency.

Warning:

Fiber optic equipment can emit laser or infrared light that can injure your eyes. Never look into an optical fiber or connector port. Always assume that fiber optic cables are connected to a light source.

Chapter 4: Installation preparation

Environmental requirements

Your switch requires a suitable environment.

To protect your switch and operate it safely, see the following table and list for a description of environmental ranges and requirements.

Acceptable environmental operating ranges

Criteria	Range
Temperature	0 to 50 degrees C
Humidity	0 to 95% non-condensing
Altitude	-200 to 13,000 feet
Acoustic noise	less than 50 dBA typical Sound pressure level measurement methods are based on ISO 7779.

Additional environmental requirements

- no nearby heat sources such as hot air vents or direct sunlight
- no nearby sources of severe electromagnetic noise
- no excessive dust
- adequate power source within six feet; one circuit required for each power supply
- at least 2 inches (5.08 cm) on all sides of the switch unit for ventilation
- adequate space at the front and rear of the switch for access to cables

Related topics:

Verifying environmental suitability on page 12
Power specifications on page 12

Verifying environmental suitability

The following section describes how to verify environmental suitability for the switch.

About this task

Perform the following procedure to verify environmental suitability before installing the switch.

Procedure

1. Determine the physical location and placement of the switch.
2. Test and assess the physical location to gather environmental ranges for temperature, humidity, altitude, and acoustic noise.
3. Verify that the installation environment meets all environmental requirements, see Environmental requirements on page 11.

Power specifications

The VSP 7000 series switches support the following power supply configurations:

- one AC power supply
- one DC power supply
- two AC power supplies
- two DC power supplies
- one AC power supply and one DC power supply

When you operate the switch with two power supplies, the switch supports redundancy, load sharing, and full hot-swap replacement of a power supply for uninterruptible operation. The power supply is location independent, you can install an AC or DC power supply into either power supply slot on the switch.

For cooling, the switch supports two air flow patterns: front to back or back to front. The air flow direction is determined by the main power supply. All power supplies and fan trays must match the air flow direction. A switch can operate for a brief period with one fan tray, but one fan may not be able to achieve maximum environmental conditions.

Each switch is shipped with two fan trays and can support up to two power supplies.

Important:

Power supply and fan tray direction must match. If you require front to back cooling, you must ensure that the power supply is designated for front to back cooling. Or, if you require

Comments? infodev@avaya.com

back to front cooling, you must ensure that the power supply is designated for back to front cooling.

The following table describes the AC and DC power specifications for the VSP 7024XLS switch.

Parameter	Input voltage	Maximum power rating
AC Input	100–240 VAC +/– 10%, 3.7A Max, 50/60 Hz	300 W
DC Input	48 VDC, 8.0A Max	300 W

Cooling fans and power supplies

VSP 7000 switches require and support two field replaceable fan trays for switch cooling. VSP 7000 switches support two field replaceable AC or DC power supplies for redundant power configurations.

Cooling fan trays

Cooling fan trays support hot-swap and are available in two models to support front to back, or back to front airflow modes. Cooling fan trays are included and must be installed before operating the switch.

Power supply compatibility with cooling fans

Power supplies support hot-swap and are available in two models to support cooling fan airflow modes.

If you are using front to back cooling or back to front cooling, ensure that you use compatible power supplies that match the cooling fan airflow.

Redundant power supply configurations

If you install two power supplies for redundancy, the switch can perform load sharing.

You can hot-swap power supplies for non stop, uninterrupted switch operation.

Power supply monitoring

For enhanced monitoring, power supplies send information to the switch software about the type (AC or DC, and airflow mode).

Related topics:

Installing the fan trays and power supply on page 13

Installing the fan trays and power supply

Your switch supports a combination of field-replaceable power supplies and cooling fan trays. Two fan trays and one power supply are included with your switch. You must install the two

fan trays and at least one power supply before using the switch. The switch supports an optional second power supply for redundancy and load sharing.

Important:

Supported cooling air flow directions are: front to back or back to front. The air flow direction of fan trays and power supplies are labelled and fixed. The fan trays and power supplies do not support the ability to change their air flow direction. Avaya recommends that you install the first power supply in PSU1 to determine the airflow direction.

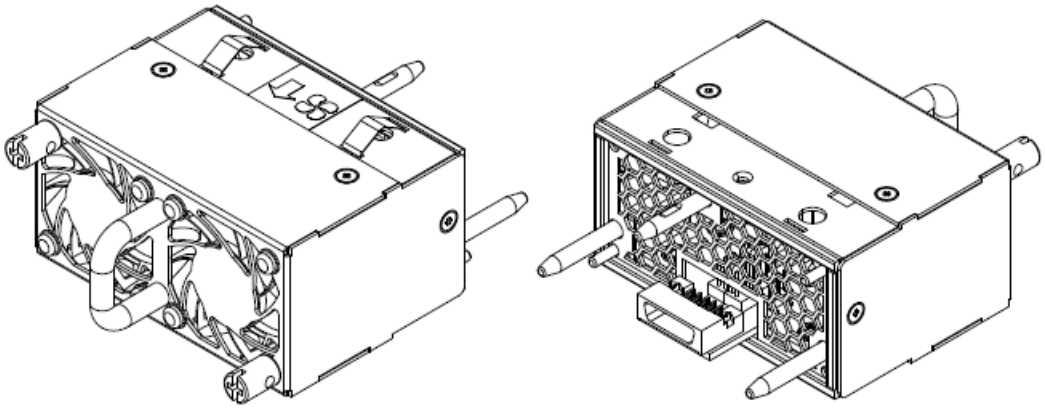

Figure 1: Fan trays

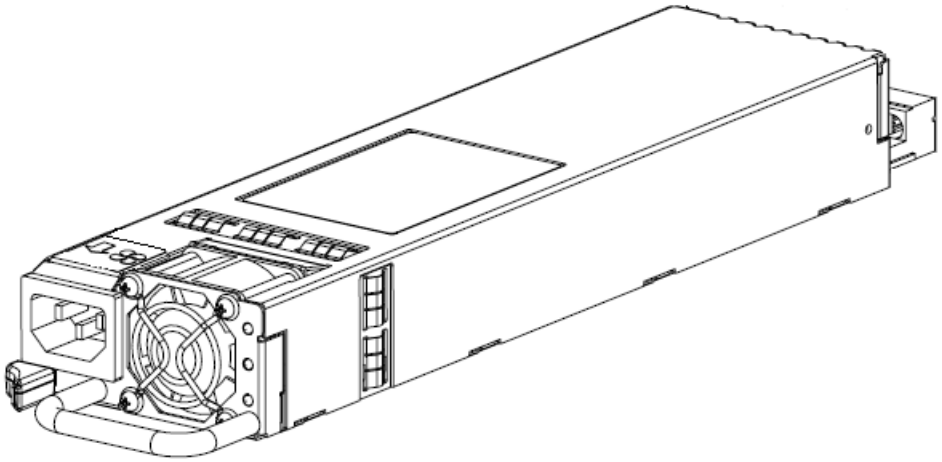

Figure 2: AC power supply

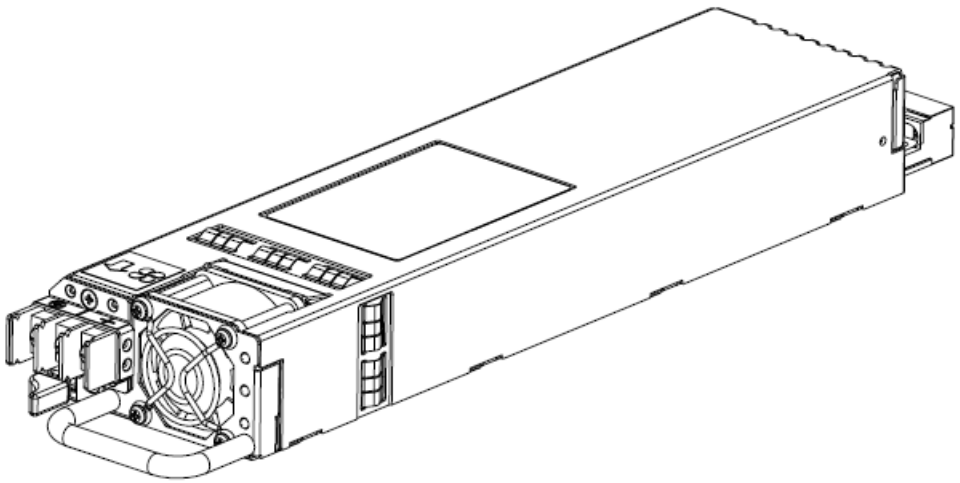

Figure 3: DC power supply

Before you begin

Verify that the fan trays and power supply are compatible—ensure that the air flow direction for all fans and power supplies match.

About this task

To install the fan trays and power supplies to your switch, use the following procedure.

Procedure

1. Insert each fan tray into a rear fan tray slot.
2. Verify that each fan tray is fully seated in the slot and secure each fan tray with two thumb screws.
3. Insert each power supply into a rear power supply slot.

   If a blanking plate covers the required power supply slot, remove the plate before inserting the power supply.
4. Verify that each power supply is fully seated in the slot and securely clipped in place.

Example

The following figures illustrate how to properly insert the cooling fan trans and power supplies into your switch.

Comments? infodev@avaya.com

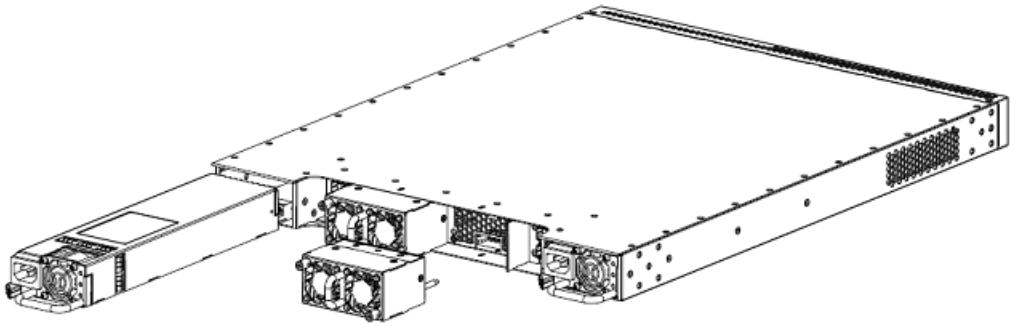

Figure 4: Installing the fan trays and power supplies

Next steps

Once you have installed the two fan trays and at least one power supply, you can install and connect power to the switch.

Power connections

The following sections describe the steps to connect power sources to the switch. Depending on your type of installation, perform the AC or DC power connection procedure.

Related topics:

AC power connections on page 17
Connecting AC power on page 19
DC power connections on page 20
Connecting DC power on page 21

AC power connections

To connect your switch to AC power you require an AC power cord that meets the requirements of your local electrical code.

International power cord specifications

Refer to the following table for power cord plug specifications.

Voltage:

Risk of injury from electric shock

Before working on this equipment, be aware of proper safety practices and hazards involved with electrical circuits. Use only power cords that have a grounding path. Ensure the switch is properly grounded before connecting a power source.

Note:

VSP 7000 series switches do not have a power switch. When you connect the AC power cord to a suitable AC power outlet, the switch powers up immediately. Ensure that you connect the AC power cord to the back of the switch, and then connect the cord to a power outlet. You must use the correct power cord for the switch and power supply.

Country and plug description	Specifications	Typical plug
Continental Europe • CEE7 standard VII male plug • Harmonized cord (HAR marking on the outside of the cord jacket to comply with the CENELEC Harmonized Document HD-21)	220 or 230 VAC 50 Hz Single phase	 228FA
U.S./Canada/Japan • NEMA5–15P male plug • UL-recognized (UL stamped on cord jacket) • CSA-certified (CSA label secured to the cord)	100 or 120 VAC 50/60 Hz Single phase	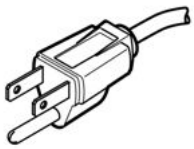 227FA
United Kingdom • BS1363 male plug with fuse • Harmonized cord	240 VAC 50 Hz Single Phase	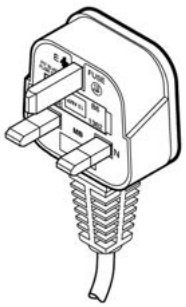 229FA
Australia AS3112–1981 male plug	240 VAC 50 Hz Single phase	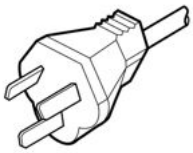 230FA

Comments? infodev@avaya.com

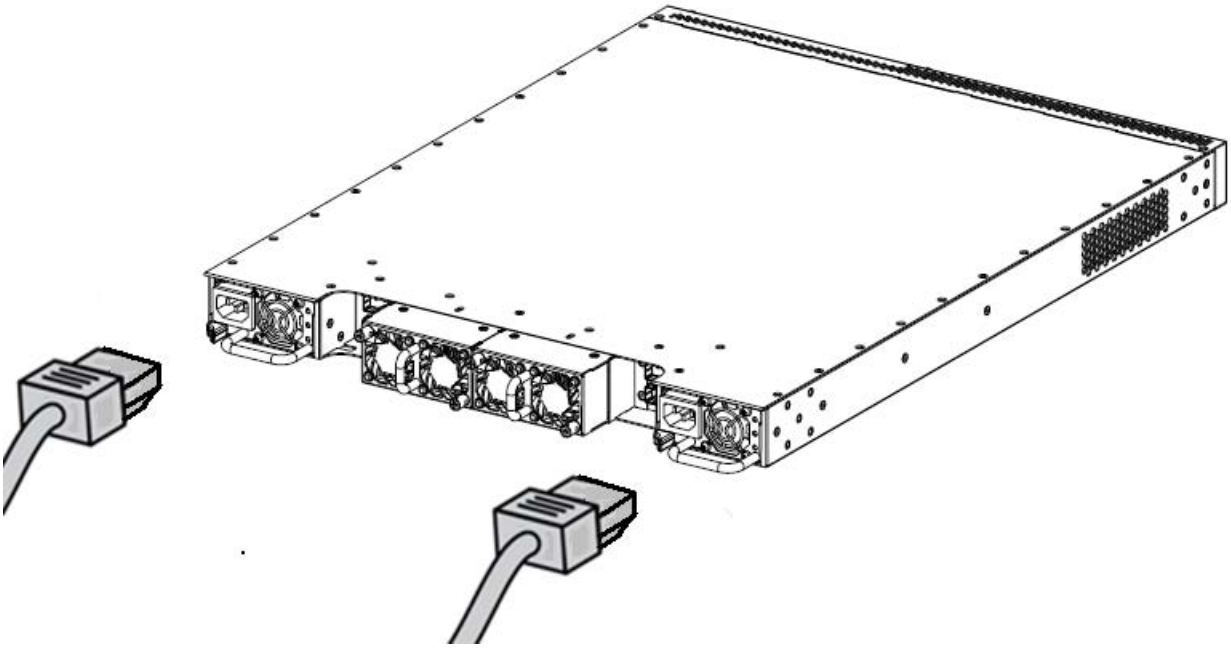

Figure 5: Connecting AC power cord to the switch

Note:
Secondary power supply is optional for redundancy and load sharing.

Connecting AC power

Perform the following procedure to connect an AC power source to the switch.

Before you begin

To connect AC power to the switch an appropriate AC power cord is required. Ensure the switch power supply supports AC power input.

About this task

Connecting the AC power source to the switch.

Danger:
Use only power cords with a grounding path. Without a proper ground, a person who touches the switch is in danger of receiving an electrical shock. A switch without a proper grounding path can result in excessive emissions

Procedure

1. Plug the female end of the AC power cord into the back of the switch power supply.

Important:

The switch will power on immediately once connected to a suitable AC power source. The switch does not have a power switch.

2. Plug the male end of the AC power cord into a suitable AC power outlet.

Caution:

Ensure you only use an appropriately rated AC power cord. Do not use an extension cord.

Warning:

The only way to turn off the switch is to disconnect the power. Always connect the AC power cord in a location that can be reached quickly and safely in case of an emergency.

DC power connections

To connect your switch to DC power you require DC power cables and ground cables that meet the requirements of your local electrical code. Avaya does not supply the cables for connecting the DC power supply to the DC power source. Select cables that comply with the electrical code of the country where you use the DC power supply.

DC power supply connections

Caution:

Risk of equipment damage

Make sure that the connection cables used with the DC power supply are appropriate for use with your DC power source. Consider gauge, flammability, and mechanical serviceability when determining the type of cables to use.

Voltage:

Risk of injury from electric shock

Before working on this equipment, be aware of proper safety practices and hazards involved with electrical circuits. Use only power cords that have a grounding path. Ensure the switch is properly grounded before connecting a power source.

Note:

VSP 7000 series switches do not have a power switch. Ensure that your DC power source is off when connecting DC power cables to the back of the switch power supply. Verify all terminal connections, then connect the DC power cables to your DC power source. When

Comments? infodev@avaya.com

you connect the DC power supply to a suitable DC power source, the switch powers up immediately.

You must prepare the cables by stripping insulation from the end of the cable approximately 0.81 inch (2.1 cm) before you fasten each cable to a power supply terminal. The following figure shows the DC power supply terminals and DC power supply status LEDs.

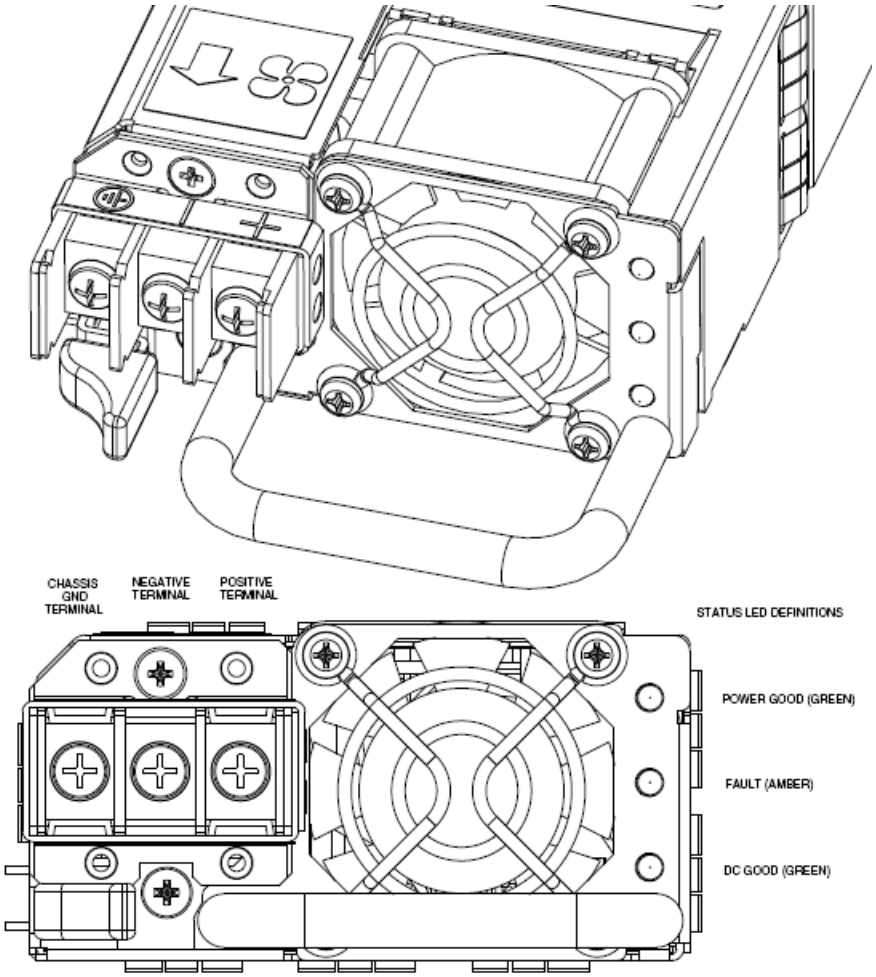

Figure 6: DC power supply terminals

Connecting DC power

Perform the following procedure to connect a DC power source to the switch.

Before you begin

Ensure the DC power source is switched off. Ensure the switch power supply supports DC power input.

Ensure the cables ends are stripped and that the cables are an appropriate length and gauge for the installation.

About this task

Connecting the DC power source to the switch.

Procedure

1. Connect a grounding cable from ground to the DC power supply ground terminal.
2. Connect the DC leads to the positive and negative DC power supply terminals.
3. Tighten the screws on the terminal blocks to secure all cables.
4. Attach the opposite ends of the DC leads to a 48V DC power source.

Comments? infodev@avaya.com

Chapter 5: Switch installation

Switch placement options

You can install the switch in an equipment rack using the brackets provided. The included brackets allow for two-post equipment rack front mount or rear mount installations. If you are installing the switch into a four-post equipment rack, you can use an optional four-post extended bracket kit (sold separately).

You can also install a single switch on any flat surface that can safely support the weight of the switch and attached cables. A switch with two power supplies installed weighs approximately 27 lbs (12.25 kg). Cable weight varies for each installation.

Ensure the area where you install and use the switch meets all environmental requirements.

Environmental requirements

The following list describes the requirements for the switch environment.

- ambient temperature between 32°F and 106°F (0°C and 41°C)
- relative humidity between 10% and 90% noncondensing
- no nearby heat sources such as hot air vents or direct sunlight
- no nearby sources of severe electromagnetic noise
- no excessive dust
- adequate power source within six feet; one circuit required for each power supply
- at least 2 inches (5.08 cm) on all sides of the switch unit for ventilation
- adequate space at the front and rear of the switch for access to cables

Note:

The switch supports thermal protection and immediately shuts down if the internal temperature reaches 185°F (85°C).

The switch software monitors the internal temperature and generates log and SNMP traps to indicate that the switch is running above the high temperature threshold and is approaching a critical over temperature fault.

Installing the switch in an equipment rack

Before you begin

Tool requirements

- a Phillips screwdriver to attach brackets to the switch and the switch to the rack.

Rack requirements

- space of 2.8 inches (7.1 cm) for each switch in an E1A or 1EC standard 19 inch (48.2 cm) equipment rack and T1A 23 inch (58.5 cm) equipment rack.
- appropriate rack space to accommodate 1U switch height (44 mm).
- rack bolted to floor and braced if necessary
- rack must be grounded to the same grounding electrode used by the power service in the area. The ground path must be permanent and must not exceed 1 Ohm of resistance from the rack to the grounding electrode.

About this task

Perform the following procedure to install your switch in an equipment rack.

Procedure

1. Ensure power is disconnected from the switch.
2. Attach a bracket to each side of the switch with the included screws.

   The included mounting bracket allows for many different options for front and rear mounting positions, see the following figures. Attach the brackets in the best position for your specific equipment rack.

Comments? infodev@avaya.com

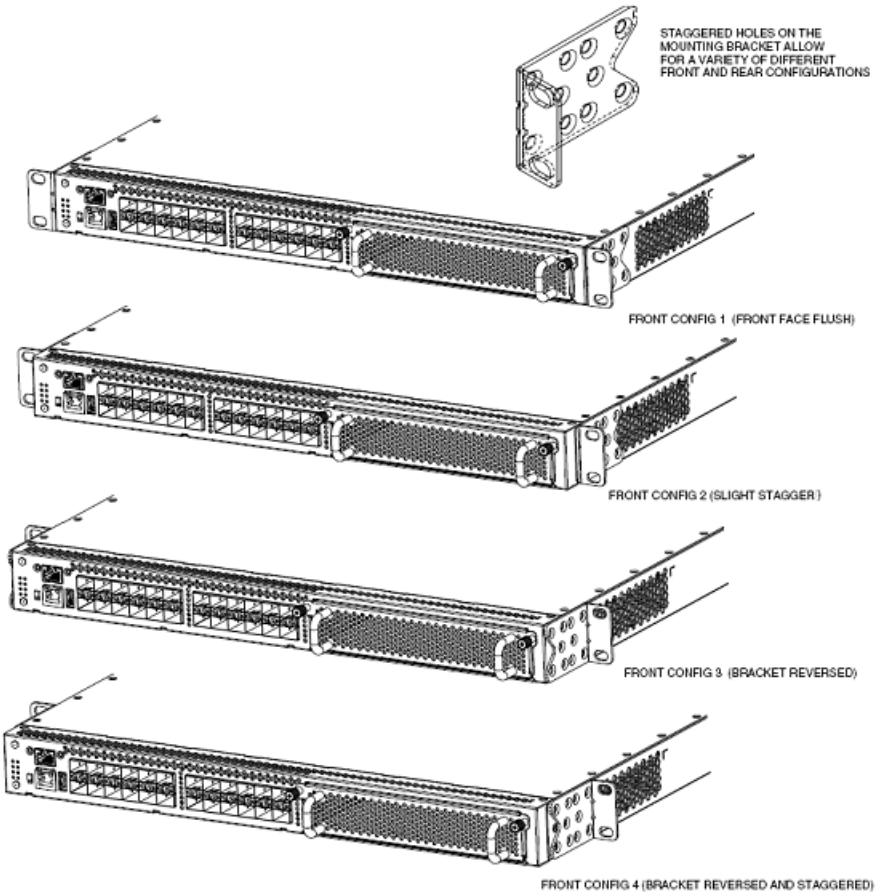

Figure 7: Front-mounted rack bracket installation options

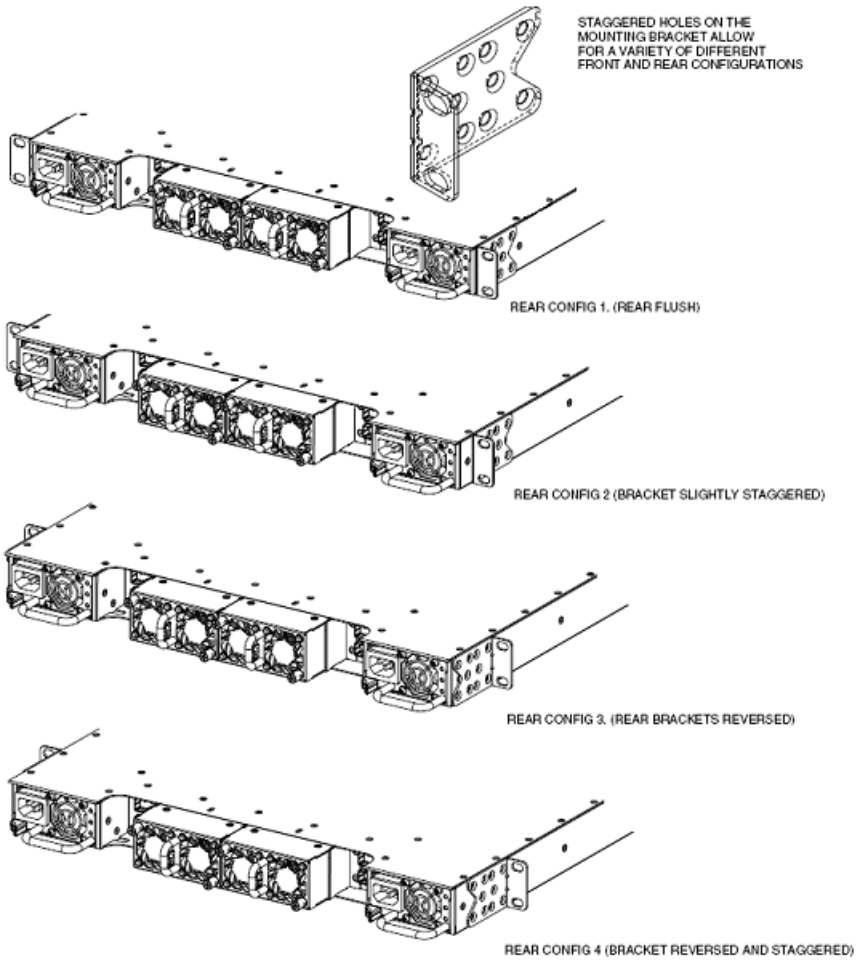

Figure 8: Rear-mounted rack bracket installation options

For four-post equipment rack installations, an optional four-post rack mounting kit (sold separately) is available that includes adjustable rear brackets and clamps. For more information, see Installing optional four post rack mount brackets on page 27.

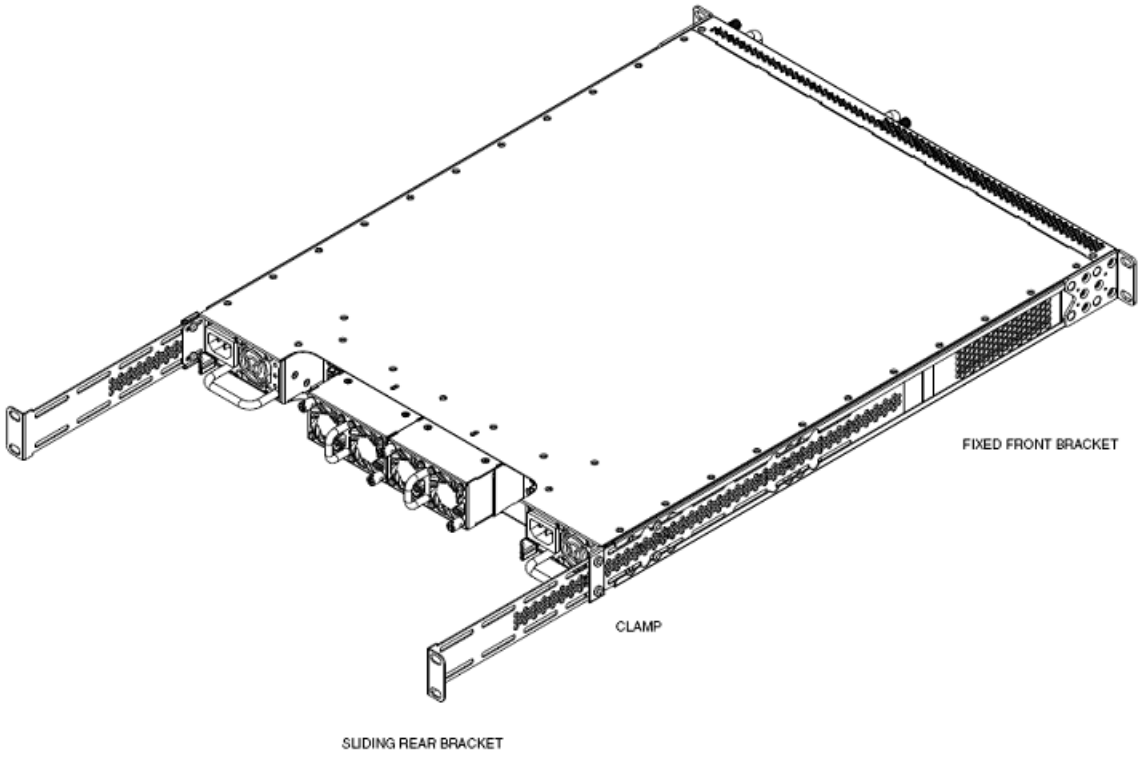

Figure 9: Optional four-post rack mount brackets

3. Slide the switch into the rack.
4. Fasten the switch to the equipment rack with rack mount screws.
5. Verify that the switch is securely fastened to the rack.

   You can proceed with the installation by connecting power and network connections to the switch.

Installing optional four post rack mount brackets

Before you begin

VSP 7000 four post server rack mount kit — AL7011001–E6

Tool requirements

- a Phillips screwdriver to attach brackets to the switch and the switch to the rack.
- a Hex wrench to assemble and attach the optional four-post rack mount brackets.

Rack requirements

- Space of 2.8 inches (7.1 cm) for each switch in an E1A or 1EC standard 19 inch (48.2 cm) equipment rack and T1A 23 inch (58.5 cm) equipment rack.
- Appropriate rack space to accommodate 1U switch height (44 mm).
- Four post rack bolted to floor and braced if necessary
- Four post rack must be grounded to the same grounding electrode used by the power service in the area. The ground path must be permanent and must not exceed 1 Ohm of resistance from the rack to the grounding electrode.

Verify that you have all the screws, brackets, and clamps to assemble and install the four post rack mount kit.

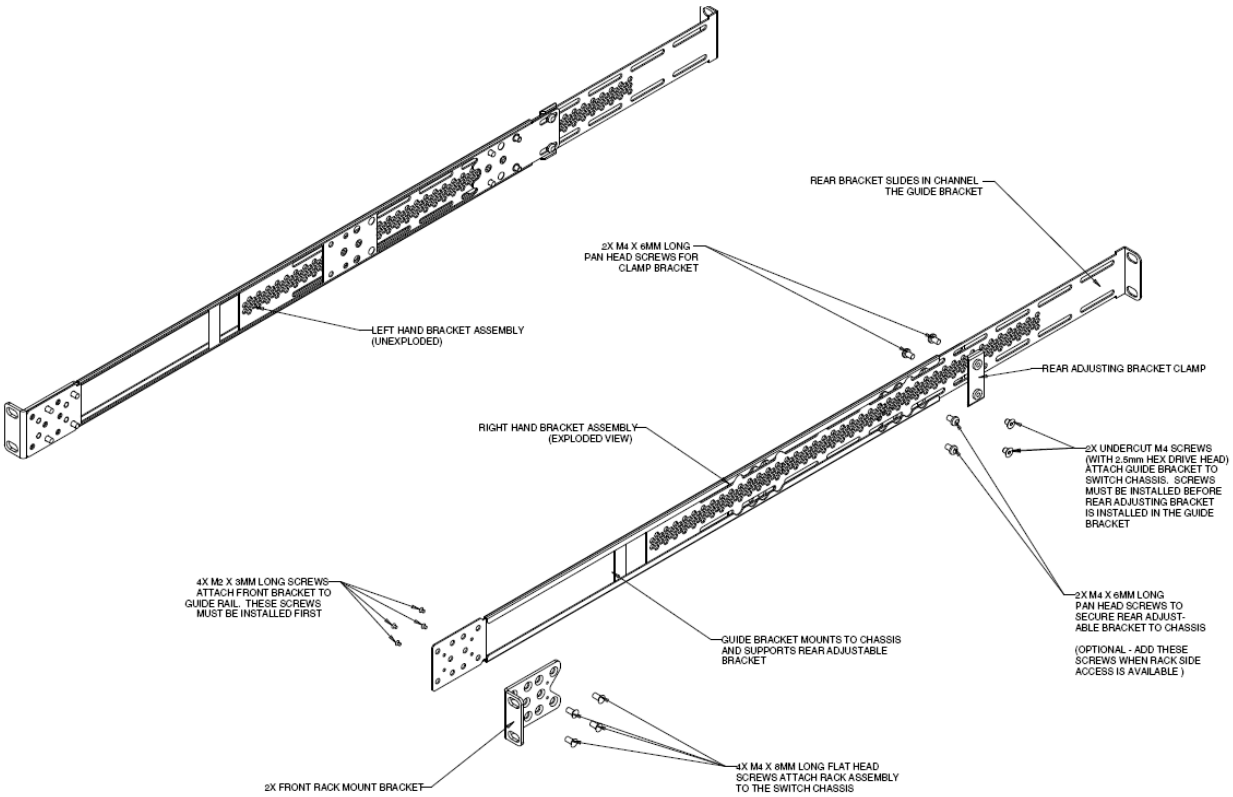

Figure 10: Four post rack mount kit assembly

About this task

Perform the following procedure to assemble and install the four post rack mount bracket kit.

Procedure

1. Attach a front bracket to each guide bracket with four M2 x 3mm long flat head machine screws.

Comments? infodev@avaya.com

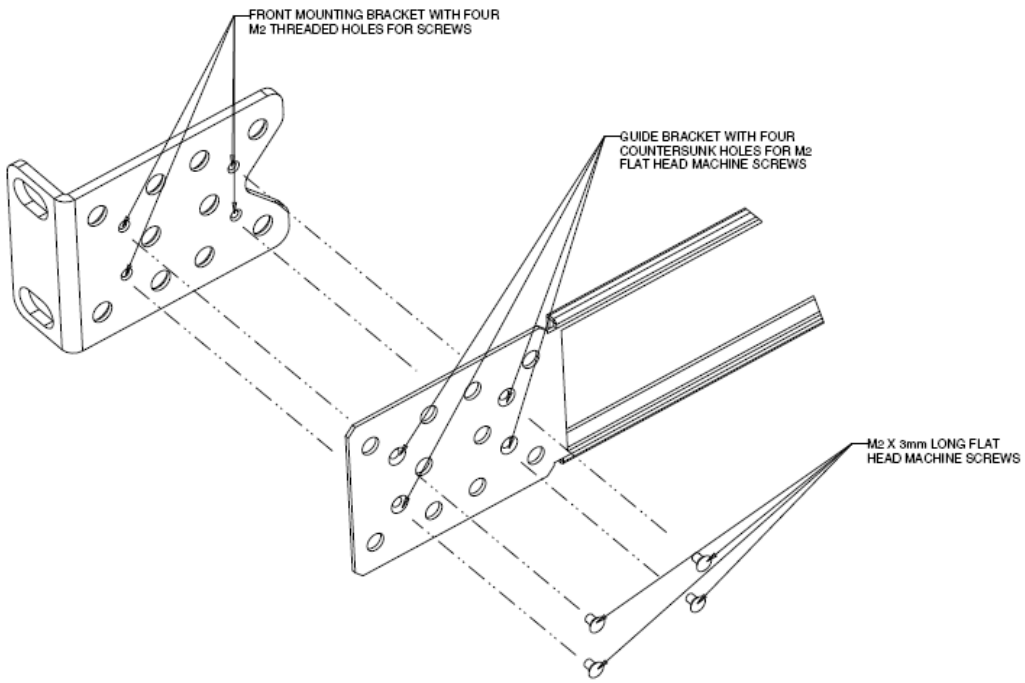

Figure 11: Attach front brackets to guide brackets

2. Attach the guide brackets to the switch chassis.

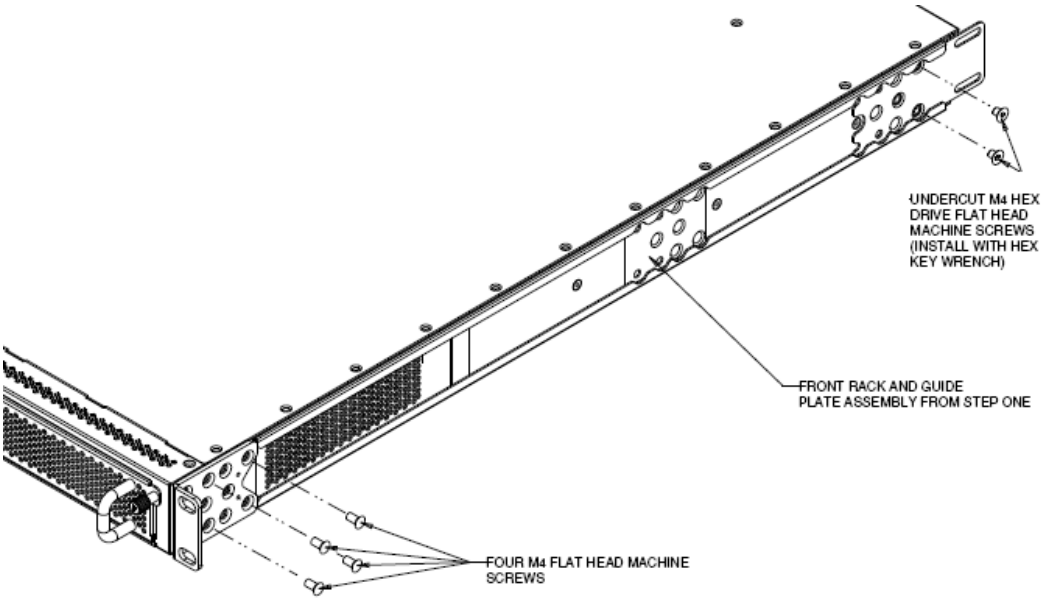

Figure 12: Attach guide brackets

a) Use four M4 flat head Phillips machine screws to attach the front of each guide bracket to the switch chassis.

b) Use two M4 low profile undercut flat head hex machine screws to attach the rear of each guide bracket to the switch chassis.
c) Verify that the rear screws seat flush in the guide brackets.
d) Test fit the rear mounting brackets in the guide brackets and verify that the rear brackets can slide in the channels. Remove the rear brackets.

3. Install the switch into the equipment rack, temporarily using only the front rack mounts and screws.

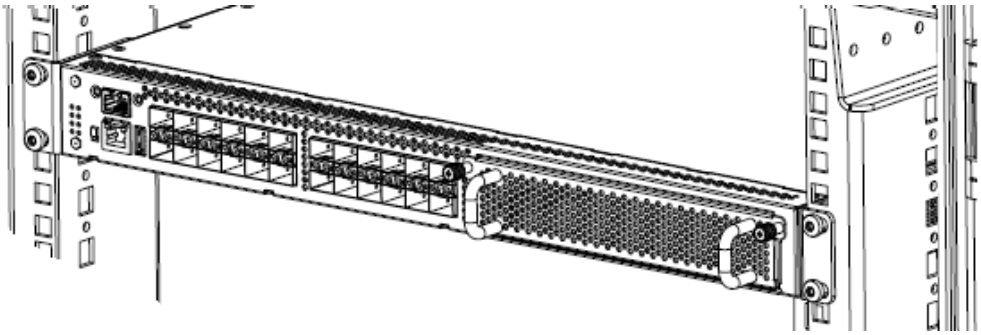

Figure 13: Install switch in rack using front rack mounts

4. Attach the rear mounting brackets and secure the switch to the rear rack posts.

a) Slide a rear mounting bracket into each guide bracket channel until flush with the rear rack posts.
b) Secure the rear mounting brackets to the rear rack posts with screws.
c) Secure the rear mounting brackets to the switch chassis with the clamp plates and pan head screws.
d) Optional — If you have access to the sides of the switch in your rack, use the extra pan head screws to provide additional strength to the rear brackets.

Comments? infodev@avaya.com

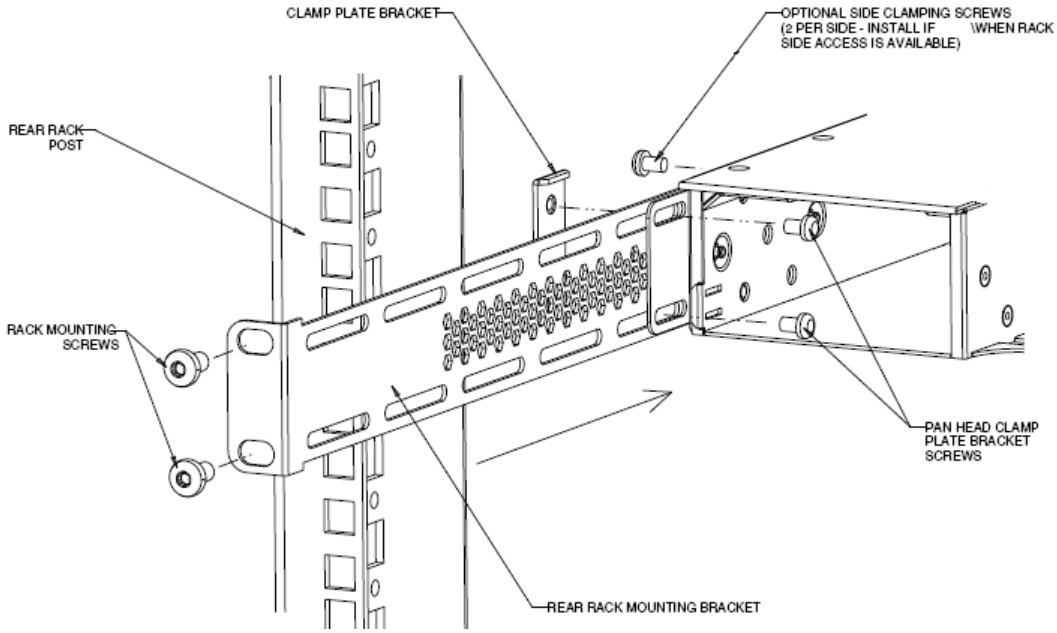

Figure 14: Attach rear mounting brackets

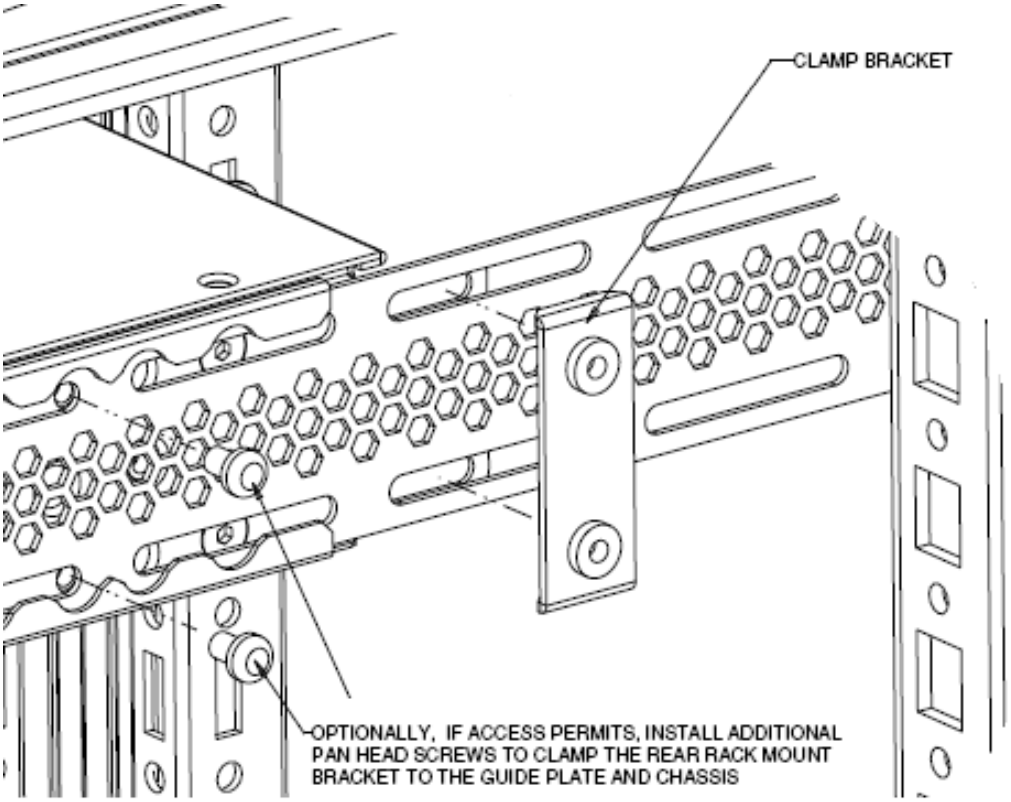

Figure 15: Optional rear bracket screws

You can proceed with the installation by connecting power and network connections to the switch.

Checking LEDs to verify switch installation

You can view the eight status LEDs on the front of the switch to verify the installation and operation of the hardware.

Before you begin

Perform the following tasks before checking the status LEDs.

- Install the fan trays and power supplies.
- Install the switch in an equipment rack or on a shelf.
- Connect power to the switch.

About this task

Perform the following procedure to verify the hardware installation and operation of the switch.

Procedure

1. Locate the eight status LEDs on the front of the switch, see the following figure.

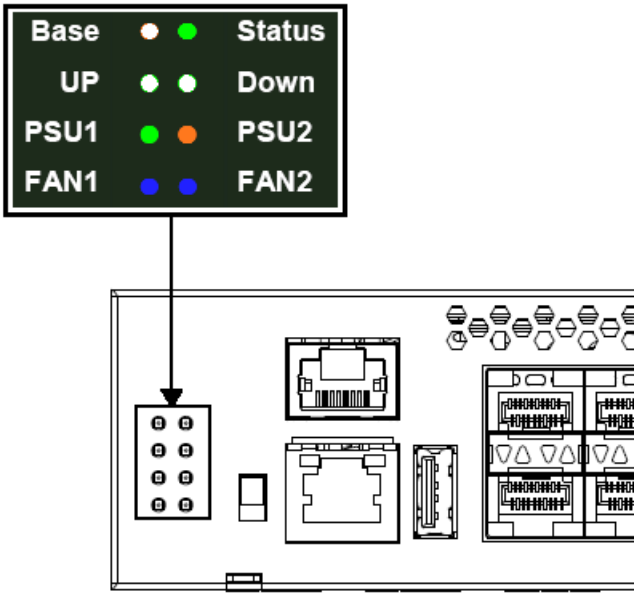

Figure 16: Status LEDs

Comments? infodev@avaya.com

2. View the status LED states to verify that the fan trays and power supplies are installed and operating correctly. You can also verify the status and operating mode of the switch.

   For status LED state descriptions, see the following table.

   Table 1: Status LED descriptions

LED	State	Description
Base	Off	The switch is operating in standalone mode. If in a virtual fabric, the switch is not a Base unit or a Temporary Base unit.
	Amber (Solid)	The switch is operating as the Temporary Base unit.
	Amber (Blinking)	The switch has a Base unit election problem. Multiple switches are configured with the Base unit switch on, or no switch has the Base unit switch on.
	Amber (Fast Flashing)	The switch did not join the virtual fabric. Refer to the switch log for more information.
	Emerald (Solid)	The switch is operating as the Base unit in a virtual fabric.
	Emerald (Blinking)	The switch joined the virtual fabric and Automatic Unit Replacement is upgrading the diagnostics, agent, or configuration file.
Status	Off	The switch is not operating.
	Amber (Solid)	The switch encountered an error during diagnostics.
	Amber (Blinking)	The switch is booting. During boot the switch executes the boot loader and diagnostics.
	Emerald (Solid)	The switch is operating normally. Agent software is loaded.
	Emerald (Blinking)	The switch is loading the agent software.
Up / Down	Off	The switch Fabric Interconnect Up / Down cable is not detected or connected to an adjacent switch.
	Amber (Solid)	The switch Fabric Interconnect Up / Down cable is detected and

LED	State	Description
		connected to an adjacent switch, but adjacency with the neighbor is not complete.
	Emerald (Solid)	The switch Fabric Interconnect Up / Down cables are detected and connected to an adjacent switch. Adjacency with the neighbor is complete.
	Emerald (Blinking)	The switch Fabric Interconnect formed a partial neighbor with an adjacent switch. Check the Fabric Interconnect Up / Down cable connections.
PSU1 / PSU2	Off	The power supply in slot 1/2 is not connected to a power source.
	Amber (Solid)	The power supply in slot 1/2 is removed after operating (Non-Service Effecting).
	Amber (Blinking)	The power supply in slot 1/2 is installed, but not providing power to the switch (Non-Service Effecting).
	Emerald (Solid)	The power supply in slot 1/2 is operating normally.
	Emerald (Blinking)	The power supply in slot 1/2 is disconnected from power after operating (Non-Service Effecting).
	Emerald / Amber (Alternating)	The power supply in slot 2 is operating, but the airflow mode does not match the power supply in slot 1. You must replace the power supply to match the airflow.
FAN1 / FAN2	Ruby (Solid)	If both FAN LEDs are ruby, the switch shut down from an over voltage fault or an over temperature fault. For an over voltage fault, the switch shuts down within four seconds. For an over temperate fault, the switch shuts down immediately. **Note:** The switch software monitors the internal temperature and generates log and SNMP traps to

Comments? infodev@avaya.com

LED	State	Description
		indicate that the switch is running above the high temperature threshold and is approaching a critical over temperature fault.
	Ruby (Blinking)	The fan tray in position 1/2 is missing. You must install a fan tray, and the fan tray must match the airflow mode of the power supply.
	Ruby (Fast Blinking)	The fan tray in position 1/2 is connected but is not operating. Replace the failed fan tray.
	Sapphire (Solid)	The fan tray in position 1/2 is front to back airflow and is operating normally.
	Sapphire (Blinking)	The fan tray in position 1/2 is front to back airflow and has degraded. Check for a fan failure and replace if necessary.
	Amethyst (Solid)	The fan tray in position 1/2 is back to front airflow and is operating normally.
	Amethyst (Blinking)	The fan tray in position 1/2 is back to front airflow and has degraded. Check for a fan failure and replace if necessary.
	Amethyst / Ruby (Alternating)	The fan tray in position 1/2 does not match the front to back airflow mode of the switch power supply. You must replace the fan tray with a front to back airflow model.
	Sapphire / Ruby (Alternating)	The fan tray in position 1/2 does not match the back to front airflow mode of the switch power supply. You must replace the fan tray with a back to front airflow model.
	Sapphire (Blink x3) / Ruby (Solid)	The fan tray in position 1/2 has degraded and does not match the front to back airflow mode of the switch power supply. You must replace the fan tray with a front to back airflow model.
	Amethyst (Blink x3) / Ruby (Solid)	The fan tray in position 1/2 had degraded and does not match the back to front airflow mode of the

LED	State	Description
		switch power supply. You must replace the fan tray with a back to front airflow model.

Comments? infodev@avaya.com

Chapter 6: Fabric Interconnect

Fabric Interconnect stacking

The Avaya Virtual Services Platform 7000 Series supports Fabric Interconnect (FI) stacking. You can Fabric Interconnect up to eight VSP 7000 Series switches, providing connectivity for up to 256 ports. Fabric Interconnect allows for flexible, scalable, and redundant deployments of multiple units. Once adjacency is established across units, an FI stack is referred to as a virtual fabric. You can efficiently manage a virtual fabric as a single unit.

Fabric Interconnect ports

The Fabric Interconnect ports are a component of the VSP 7000 Series back panel. Each switch contains four Fabric Interconnect ports, supporting a total FI bandwidth of 640 Gbps (full-duplex) for each switch. The two FI-up ports can provide 320 Gbps (full-duplex), and the two FI-down ports can provide 320 Gbps (full-duplex) of bandwidth. The FI ports support loop back tests through attached FI cables to a switch upstream or downstream. The FI ports can also support port type statistics for troubleshooting.

Figure 17: Fabric Interconnect ports

Note:

Consider each pair of FI ports as a single connection. You must use a pair of FI ports (two FI-up or two FI-down) and two FI cables connected to an adjacent unit FI ports to establish a virtual fabric.

Fabric Interconnect cable

Each pair of FI-up and FI-down ports requires two FI cables. Fabric Interconnect cables are available in various lengths. The following FI cables are supported:

Order code	Description
AL7018001–E6	VSP 7000 Fabric Interconnect 0.6M
AL7018002–E6	VSP 7000 Fabric Interconnect 1.5M

Order code	Description
AL7018003–E6	VSP 7000 Fabric Interconnect 3.0M
AL7018004–E6	VSP 7000 Fabric Interconnect 5.0M
AL7018005–E6	VSP 7000 Active Fabric Interconnect 10.0M

Avaya recommends ordering matched length FI cables in pairs to meet your installation requirements. A minimum of two FI cables are required to establish a virtual fabric to an adjacent unit.

Note:

Fabric Interconnect cables are ordered individually. Ensure to order a minimum of two matched FI cables for each unit. For redundant virtual fabrics, you require one extra longer pair of FI cables to complete the loop from the bottom unit to the top unit.

Caution:

In operating environments where the ambient temperature is above 40C, the metal surfaces on the AL7018005–E6 FI cables can become hot. Use caution when removing or handling hot connectors.

Base unit switch

The Base unit switch is located on the front panel of the switch. Use the Base unit switch to designate a switch in the virtual fabric as the Base unit. Slide the Base unit select switch to the down position to designate a switch as the Base unit. You must designate only one switch in a stack as the Base unit. The Base unit switch of all the other non-base units in the virtual fabric must be in the up position. You can verify the Base unit selection from the switch position and status LED display on the front panel.

Fabric Interconnect configurations

Each switch has a pair of FI-up and FI-down ports. You can connect the switches in a virtual fabric using a pair of FI ports, and FI cables. The virtual fabric type and unit numbering is dependent upon the FI cabling configuration, and the base unit position in the virtual fabric.

You must always connect an FI-up port to an FI-down port, or an FI-down port to and FI-up port on adjacent units. You must also always connect the two FI cables top to top , and bottom to bottom on adjacent switches. The following figure illustrates a simple non-redundant FI cabling connection in a virtual fabric of two switches.

Comments? infodev@avaya.com

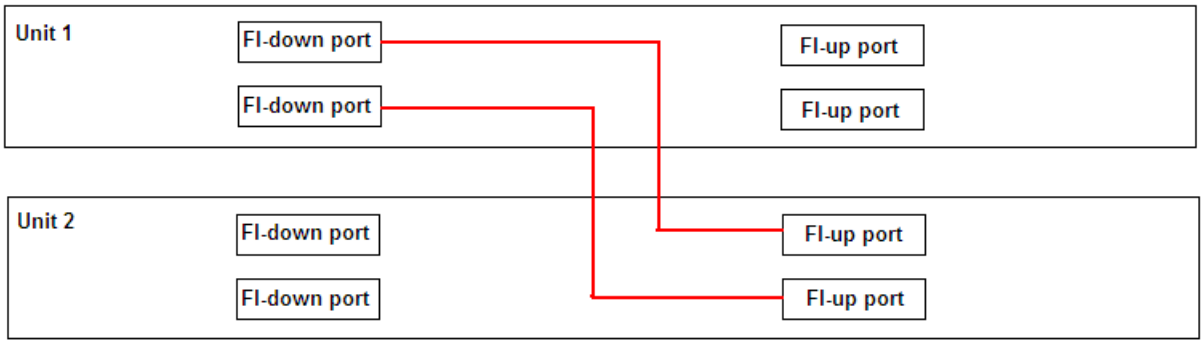

Figure 18: Non-redundant FI cabling simple diagram

FI down configuration

In a FI down configuration, the base unit is physically located at the top of the stack. The software automatically numbers the physical units based on the designated base unit (unit 1). The FI cables connected to the FI-down ports of the base unit terminates in the FI-up ports on the next unit in the stack, located below the base unit. The next unit is designated unit 2. The FI stack is wired downward though the units and the software continues to number down through the FI stack. In this configuration, the base unit discovers the virtual fabric in a FI down direction. The following illustration shows a typical FI down configuration.

Figure 19: FI down cable configuration

Note:

Avaya recommends you to use the FI down configuration. Many network management software packages assume a stack down configuration.

FI up configuration

In a FI up configuration, the base unit is physically located at the top of the stack. The software automatically numbers the physical units based on the designated base unit (unit 1). The FI cables connected to the FI-down ports of the base unit terminates in the FI-up ports on the bottom unit in the FI stack. This bottom unit is designated unit 2. The FI stack is wired upwards though the units and the software continues to number up though the FI stack. In this configuration, the base unit discovers the virtual fabric in a FI up direction. The following illustration shows a typical FI up configuration.

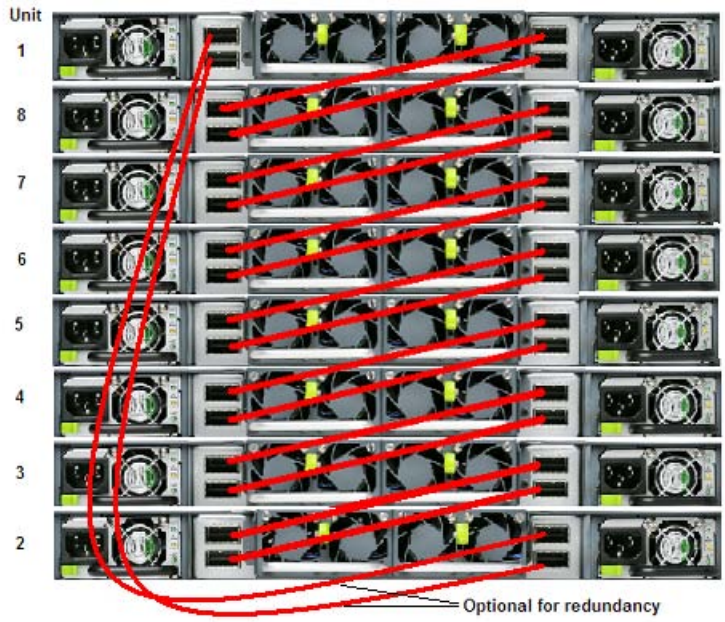

Figure 20: FI up cable configuration

Note:

Avaya recommends you to use the FI down configuration. Many network management software packages assume a stack down configuration.

Redundant FI configuration

The VSP 7000 Series switches support redundant FI stacking. You can create a redundant FI cable loop by connecting the base unit to the unit physically at the bottom of the stack. In a redundant FI configuration, if a single unit fails, or if a FI cable is disconnected or damaged, other units in the stack can remain operational without interruption.

In a redundant configuration, the software uses the FI cables to provide two paths between units. If one path fails, the data can travel over the remaining path with half of the normal FI bandwidth. The following is an example of how a redundant FI configuration reacts to a failed connection.

Comments? infodev@avaya.com

Failure example:

- Unit 3 becomes non-operational due to a unit failure, cable disconnection, or power loss.
- Units 2 and 4, upstream and downstream from Unit 3, sense the loss of Unit 3. The software reroutes all data across the remaining path.
- The Down LED for Unit 2 and the Up LED for Unit 4 turn off indicating a connection error occurred.
- The FI stack remains operating with half of the normal bandwidth for Unit 2 and 4, Unit 1 has full bandwidth.

Installing Fabric Interconnect cables

Creating a virtual fabric requires the installation of Fabric Interconnect (FI) cables to interconnect the switch units. The length, routing, and number of FI cables required varies depending on your Fabric Interconnect configuration. Avaya recommends you to use the redundant FI down configuration.

Before you begin

You must have enough FI cables to interconnect the units. See Fabric Interconnect stacking on page 37

Note:

Consider each pair of FI ports on a unit as a single connection. Each pair of FI ports requires two FI cables. Ensure to order a minimum of two matched FI cables for each unit. For redundant virtual fabrics, you require one matched pair of longer FI cables to complete the loop from the bottom unit to the top unit.

About this task

Use the following procedure to install Fabric Interconnect cables onto VSP 7000 Series units.

Procedure

1. Choose a Fabric Interconnect configuration. For more information, see Fabric Interconnect configurations on page 38
2. Connect each FI cable to an FI port. Route the cables between units to support your chosen FI configuration.

   Important:

   You must orient each cable so that the alignment slot on the FI cable connector is facing up and aligns with the alignment tab on the FI port. Verify that the cable is inserted properly and that the cable connector pull tab is facing up. For more information, see the following figures.

Warning:

Risk of equipment damage

Incorrect FI cable insertion can cause physical damage to the VSP 7000 Series switch. The FI cable label can obscure your view of the connection. You must ensure that the FI cable connector alignment slot and cable connector pull tab is facing up.

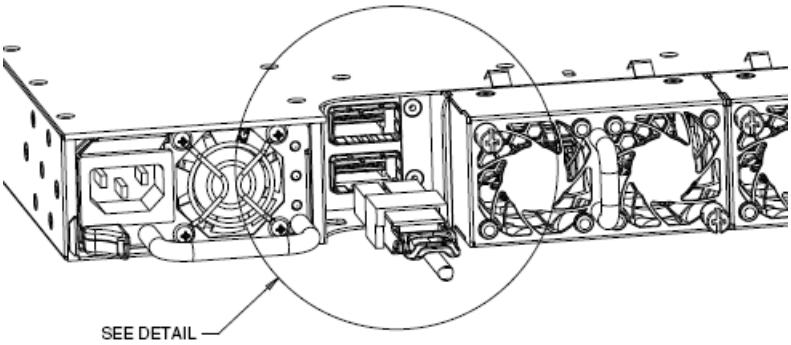

Figure 21: Installing Fabric Interconnect cables

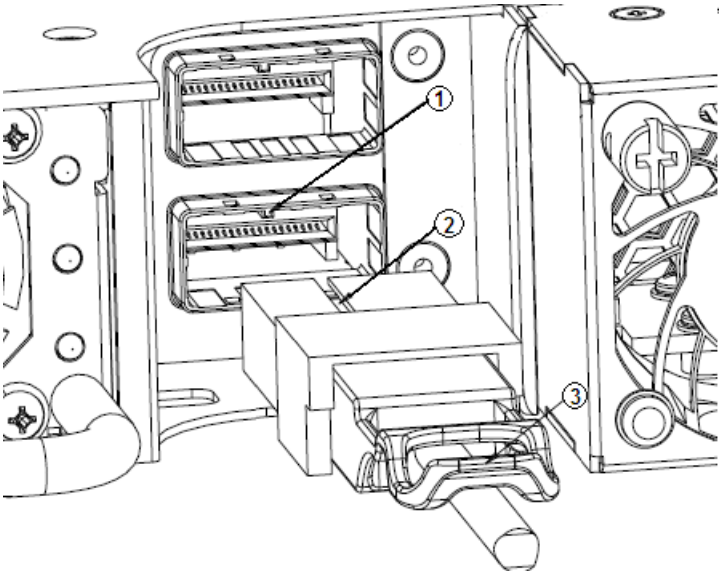

Callout	Description
1	FI port alignment tab
2	FI cable alignment slot (Insert cable with slot facing UP and aligned with tab on the port.)

Callout	Description
3	FI cable connector pull tab (Ensure that the cable connector pull tab is facing UP.)

Figure 22: Installing Fabric Interconnect cables detail

3. Select a base unit for the virtual fabric. Use the base unit switch to configure one unit as the base unit.

   Important:
   You must designate only one unit in a virtual fabric as the base unit. The base unit switch of all the other units must be in the non-base position.

4. Connect AC power.

   If you assigned the base unit and non-base units with the units powered on, you must reset the virtual fabric for the assignments to be applied.

Chapter 7: Preparations for network connectivity

Console and management connections

The left front panel of the switch contains the Status LEDs, Base Unit switch, Console port, Out of Band Management port, and a USB 2.0 port.

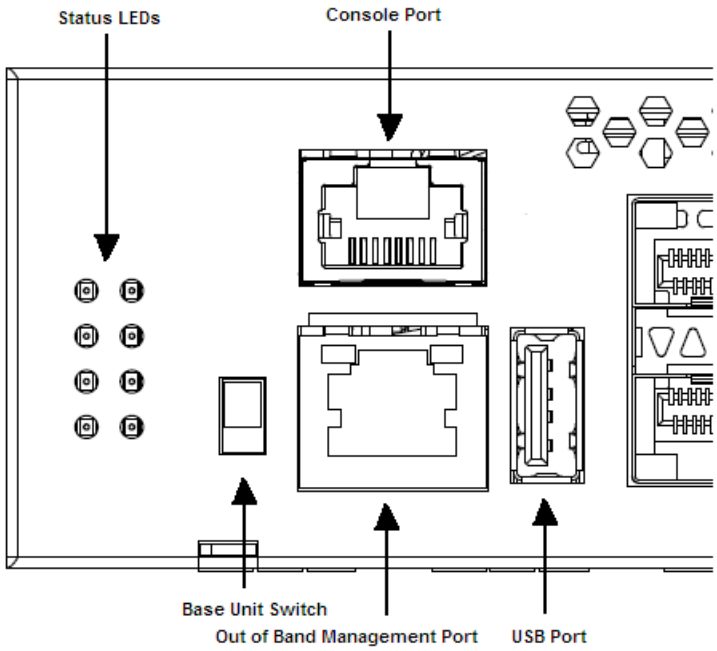

Figure 23: Console and management ports

See the following sections for more information.

Console port

The console port is the RJ45 port with a blue border outline. The port is labelled console, and can be used to establish a management terminal connection to the switch. You can use an RJ45 to DB-9 cable, or a DB-9 to RJ45 adapter to connect the switch console port to your management terminal. The maximum length of a console cable is 25 feet (8.3 meters). The following figure and table describe the RJ45 console port pin-out information. You can use the

pin-out information to verify or create a console cable for use with your maintenance terminal.

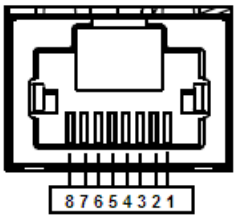

Figure 24: RJ45 console port pin-out

Table 2: Console port pin-out

RJ45 console port pin-out	Signal	Requirement
1	RTS (ready to send)	Optional (can be swapped or linked with pin 8)
2	DTR (data terminal ready)	Optional
3	TXD (transmit data)	Mandatory
4	DCD (carrier detect)	Optional
5	GND (ground)	Mandatory
6	RXD (receive data)	Mandatory
7	DSR (data set ready)	Optional
8	CTS (clear to send)	Optional (can be swapped or linked with pin 1)

Out of Band Management port

The Out of Band Management port is the RJ45 port directly below the console port. The port is labelled management, and can support 10/100/1000 Ethernet connections. The Out of Band Management port is only available for use when the switch is running diagnostic software. You can use the Out of Band Management port to perform an emergency TFTP download of diagnostic software to the switch. When performing a TFTP download, an IP address is temporarily assigned to the management port which enables the switch to receive files from the TFTP server

USB port

The USB port is a Standard Type-A female USB 2.0 port. The switch provides USB host functionality, and can support USB flash drives.

Comments? infodev@avaya.com

Small form factor pluggable transceivers

The switch supports Avaya Small Form Factor Pluggable (SFP) and Small Form Factor Pluggable Plus (SFP+) transceivers. SFP and SFP+ transceivers are devices designed to allow Gigabit connection speeds over various media types and distances. SFP transceivers support connection speeds of 1 Gbps, and SFP+ transceivers support connection speeds of 10 Gbps.

SFP and SFP+ support

The switch ports allow you to use SFP or SFP+ transceivers to interface the switch to fiber optic or unshielded twisted pair network cabling. Pluggable transceivers can support various media types, modes, and cable distances of up to 70 km. Any cable reach over 100 m requires fiber optic cable. You must select appropriate transceivers and cabling that can support your required cable distances and network architecture.

The following tables show the supported SFP and SFP+ transceivers.

Table 3: Supported SFP+ transceivers

SFP+ device	Order code
1–PORT 10GIGABIT-ER SFP+ (LC) SINGLE MODE up to 40 km	AA1403013–E6
1–PORT 10GIGABIT-LR SFP+ (LC) SINGLE MODE up to 10 km	AA1403011–E6
1–PORT 10GIGABIT-SR SFP+ (LC) MULTI-MODE FIBRE up to 300 m	AA1403015–E6
1–PORT 10GIGABIT-LRM SFP+ (LC) MULTI-MODE FIBER up to 220 m	AA1403017–E6
SFP+ DIRECT ATTACH CABLE — 10 m	AA1403018–E6
SFP+ DIRECT ATTACH CABLE — 5 m	AA1403020–E6
SFP+ DIRECT ATTACH CABLE — 3 m	AA1403019–E6

Table 4: Supported SFP transceivers

SFP device	Order code
1-PORT SFP CWDM (LC) - 1470NM up to 40 km	AA1419025-E5
1-PORT SFP CWDM (LC) - 1490NM up to 40 km	AA1419026-E5
1-PORT SFP CWDM (LC) - 1510NM up to 40 km	AA1419027-E5
1-PORT SFP CWDM (LC) - 1530NM up to 40 km	AA1419028-E5
1-PORT SFP CWDM (LC) - 1550NM up to 40 km	AA1419029-E5
1-PORT SFP CWDM (LC) - 1570NM up to 40 km	AA1419030-E5

SFP device	Order code
1-PORT SFP CWDM (LC) - 1590NM up to 40 km	AA1419031-E5
1-PORT SFP CWDM (LC) - 1610NM up to 40 km	AA1419032-E5
1-PORT SFP CWDM (LC) - 1470NM up to 70 km	AA1419033-E5
1-PORT SFP CWDM (LC) - 1490NM up to 70 km	AA1419034-E5
1-PORT SFP CWDM (LC) - 1510NM up to 70 km	AA1419035-E5
1-PORT SFP CWDM (LC) - 1530NM up to 70 km	AA1419036-E5
1-PORT SFP CWDM (LC) - 1550NM up to 70 km	AA1419037-E5
1-PORT SFP CWDM (LC) - 1570NM up to 70 km	AA1419038-E5
1-PORT SFP CWDM (LC) - 1590NM up to 70 km	AA1419039-E5
1-PORT SFP CWDM (LC) - 1610NM up to 70 km	AA1419040-E5
1-PORT 1000BASE-T SFP (RJ-45)	AA1419043-E6
SFP SX SFP DDI (LC)	AA1419048-E6
SFP LX SFP DDI (LC)	AA1419049-E6
1-PORT 1000BASE-XD SFP DDI (LC) - 1310NM	AA1419050-E6
1-PORT 1000BASE-XD SFP DDI (LC) - 1550NM	AA1419051-E6
1-PORT 1000BASE-ZX SFP DDI (LC) - 1550NM	AA1419052-E6
1-PORT SFP CWDM DDI (LC) - 1470NM up to 40 km	AA1419053-E6
1-PORT SFP CWDM DDI (LC) - 1490NM up to 40 km	AA1419054-E6
1-PORT SFP CWDM DDI (LC) - 1510NM up to 40 km	AA1419055-E6
1-PORT SFP CWDM DDI (LC) - 1530NM up to 40 km	AA1419056-E6
1-PORT SFP CWDM DDI (LC) - 1550NM up to 40 km	AA1419057-E6
1-PORT SFP CWDM DDI (LC) - 1570NM up to 40 km	AA1419058-E6
1-PORT SFP CWDM DDI (LC) - 1590NM up to 40 km	AA1419059-E6
1-PORT SFP CWDM DDI (LC) - 1610NM up to 40 km	AA1419060-E6
1-PORT SFP CWDM DDI (LC) - 1470NM up to 70 km	AA1419061-E6
1-PORT SFP CWDM DDI (LC) - 1490NM up to 70 km	AA1419062-E6
1-PORT SFP CWDM DDI (LC) - 1510NM up to 70 km	AA1419063-E6
1-PORT SFP CWDM DDI (LC) - 1530NM up to 70 km	AA1419064-E6
1-PORT SFP CWDM DDI (LC) - 1550NM up to 70 km	AA1419065-E6
1-PORT SFP CWDM DDI (LC) - 1570NM up to 70 km	AA1419066-E6
1-PORT SFP CWDM DDI (LC) - 1590NM up to 70 km	AA1419067-E6

Comments? infodev@avaya.com

SFP device	Order code
1-PORT SFP CWDM DDI (LC) - 1610NM up to 70 km	AA1419068-E6
1-PORT 1000BASE-BX SFP (LC) - 1310NM (pair with AA1419070–E6)	AA1419069-E6
1-PORT 1000BASE-BX SFP (LC) - 1490NM (pair with AA1419069–E6)	AA1419070-E6
1-PORT 1000BASE SFP DDI (LC) - 1550NM	AA1419071-E6
1-PORT 1000BASE-BX SFP (LC) - 1310NM up to 40 km (pair with AA1419077-E6)	AA1419076-E6
1-PORT 1000BASE-BX SFP (LC) - 1490NM up to 40 km (pair with AA1419076-E6)	AA1419077-E6

Note:
LC = Lucent Connector

Related topics:
SFP port LEDs on page 49
Installing SFP transceivers on page 50

SFP port LEDs

The switch front panel contains transmit (Tx) and receive (Rx) LEDs for each port. The following table describes the SFP port LED status.

LED	State	Description
Tx	Off	No SFP or SFP+ transceiver detected.
	Emerald (Solid)	SFP+ detected and link established.
	Emerald (Flashing)	SFP+ link established and transmitting.
	Amber (Solid)	SFP detected and link established.
	Amber (Flashing)	SFP link established and transmitting.
	Amber (Blinking)	Tx and Rx blink slow indicating port is disabled.
Rx	Off	No SFP or SFP+ transceiver detected.

LED	State	Description
	Emerald (Solid)	SFP+ detected and link established.
	Emerald (Flashing)	SFP+ link established and receiving.
	Amber (Solid)	SFP detected and link established.
	Amber (Flashing)	SFP link established and receiving.
	Amber (Blinking)	Rx and Tx blink slow indicating port is disabled.

Installing SFP transceivers

Perform the following procedure to install SFP or SFP+ transceivers and cabling on a switch.

Before you begin

Perform the following tasks before installing SFP or SFP+ transceivers and cabling on a switch.

- Install the fan trays and power supplies.
- Install the switch in an equipment rack or on a shelf.
- Connect power and verify the switch is operating normally.
- Plan the cabling installation for efficient routing and future maintenance accessibility.
- Verify that the SFP or SFP+ transceivers and network cabling support your network configuration.

For more information about SFP and SFP+ transceivers, see *Avaya Virtual Services Platform 7000 Installation SFP and SFP+* (NN47202–302).

About this task

Important:

The VSP 7024XLS supports SFP and SFP+ as the primary network interface. You must use a supported Avaya SFP or SFP+ transceiver.

Warning:

Risk of eye injury by laser

Comments? infodev@avaya.com

Fiber optic equipment can emit laser or infrared light that can injure your eyes. Never look into an optical fiber or connector port. Always assume that the fiber optic cables are connected to a light source.

Caution:

Risk of equipment damage

To prevent damage to devices from electrostatic discharge, always wear an antistatic wrist strap connected to an ESD jack.

Procedure

1. Follow all safety instructions for your SFP or SFP+ transceiver.
2. Remove the pluggable transceiver from it's protective packaging.
3. Grasp the pluggable transceiver connector between your thumb and forefinger.
4. Insert the pluggable transceiver into a switch port. Apply a light pressure until the device clicks and locks into position.

   Caution:

   Risk of equipment damage

   The switch ports are keyed to prevent incorrect insertion. If the pluggable transceiver resists insertion, do not force it; turn it over, and reinsert it.
5. Remove the network interface cover from the pluggable transceiver (if applicable), and insert an appropriate network interface cable into the transceiver.
6. Connect the opposite end of the network interface cable into the required network device.
7. Repeat all steps until you have completed your transceiver and network cabling installation.

Media Dependent Adapter

The Avaya Virtual Services Platform 7000 Series provides 24 fixed ports, and supports the use of a Media Dependent Adapter (MDA) to add eight additional ports to the switch. An MDA is a detachable module that you can insert into the MDA slot on the switch. The 24 fixed ports are numbered 1 to 24, and MDA ports are numbered 25 to 32. You can insert or remove an MDA without impacting traffic flow on the fixed ports.

Note:

Release 10.1 supports MDA hot-insertion, however you must enable the MDA and reboot the switch before the MDA ports can function.

The following MDA modules are supported:

- 7008XLS-MDA — provides 8 SFP+ ports

- 7008XT-MDA — provides 8 10GBASE-T ports

Note:

Half duplex is not supported on 10GBASE-T ports.

Related topics:

Installing an MDA on page 52

Installing an MDA

You can install a Media Dependent Adapter (MDA) to add additional ports on the switch.

Before you begin

Verify that the MDA is supported on your switch.

The switch chassis must be securely mounted in an equipment rack.

About this task

Perform the following procedure to insert an MDA into to the MDA slot on the switch.

Procedure

1. Ensure that the chassis is securely mounted in a rack before installing the MDA.
2. Loosen the two thumb screws on the MDA blanking plate and remove the blanking plate from front of the chassis.
3. Remove the MDA from it's protective packaging. Ensure to remove the packing around the insertion pins on the rear of the MDA.

Comments? infodev@avaya.com

4. Grasp the MDA using both handles, one in each hand.
5. Align the MDA so that the card edges line up with the card guides in the chassis.
6. Insert and slide the MDA into the opening on the front of the chassis. Firmly press the MDA into the MDA slot until it is fully seated.

   Important:

   Inserting the MDA can require a large amount of force to ensure that the MDA is fully seated.

7. Verify that the MDA is fully seated and tighten the two thumb screws to secure the MDA module.

   Caution:
   Risk of equipment damage

   If the MDA is not fully seated, do not use the thumb screws in an attempt to pull in the MDA. This can result in deformation of the MDA.

Next steps

You must configure the MDA before you can use the MDA ports. See *Avaya Virtual Services Platform 7000 Series Getting Started* (NN47202–303) for more information about configuring and enabling an MDA.

Chapter 8: How to get help

Customer service

Visit the Avaya Web site to access the complete range of services and support that Avaya provides, see www.avaya.com.

Getting technical support

You can get technical support and technical documentation for Avaya products from the Avaya technical support Web site, see www.avaya.com/support. You can also get product training from the Avaya technical support Web site, see www.avaya.com/support and locate the training contacts link.

Getting help from a distributor or reseller

If you purchased a service contract for your Avaya product from a distributor or authorized reseller, contact the your distributor or reseller technical support staff for assistance.

Appendix A: Hardware reliability

Mean time between failures

Mean time between failures (MTBF) is the average value of the time intervals between successive outages of the system. This average value is calculated from, and based on, a large population of nominally identical items. The following table provides MTBF values for VSP 7000 series hardware.

Important:

You must install the switch and it's components correctly and operate the hardware within the supported environmental conditions. The MTBF values in the following table do not include failure caused by software or human error.

Hardware	MTBF (Calculated)
VSP7024XLS base unit (no fans, no power supplies)	261,500 hours
Fan tray (Back to Front, or Front to Back)	1,000,000 hours
Power supply	300,000 hours
7008XLS Media Dependent Adapter (8 SFP+ ports)	
7008XT Media Dependent Adapter (8 10GBASE-T ports)	