Installing and Maintaining the Avaya E169 IP Media Station

Release 1.0
June 2014

© 2014 Avaya Inc.

All Rights Reserved.

Notice

While reasonable efforts have been made to ensure that the information in this document is complete and accurate at the time of printing, Avaya assumes no liability for any errors. Avaya reserves the right to make changes and corrections to the information in this document without the obligation to notify any person or organization of such changes.

Documentation disclaimer

“Documentation” means information published by Avaya in varying mediums which may include product information, operating instructions and performance specifications that Avaya may generally make available to users of its products and Hosted Services. Documentation does not include marketing materials. Avaya shall not be responsible for any modifications, additions, or deletions to the original published version of documentation unless such modifications, additions, or deletions were performed by Avaya. End User agrees to indemnify and hold harmless Avaya, Avaya's agents, servants and employees against all claims, lawsuits, demands and judgments arising out of, or in connection with, subsequent modifications, additions or deletions to this documentation, to the extent made by End User.

Link disclaimer

Avaya is not responsible for the contents or reliability of any linked websites referenced within this site or documentation provided by Avaya. Avaya is not responsible for the accuracy of any information, statement or content provided on these sites and does not necessarily endorse the products, services, or information described or offered within them. Avaya does not guarantee that these links will work all the time and has no control over the availability of the linked pages.

Warranty

Avaya provides a limited warranty on Avaya hardware and software. Refer to your sales agreement to establish the terms of the limited warranty. In addition, Avaya’s standard warranty language, as well as information regarding support for this product while under warranty is available to Avaya customers and other parties through the Avaya Support website: http://support.avaya.com or such successor site as designated by Avaya. Please note that if you acquired the product(s) from an authorized Avaya Channel Partner outside of the United States and Canada, the warranty is provided to you by said Avaya Channel Partner and not by Avaya.

Licenses

THE SOFTWARE LICENSE TERMS AVAILABLE ON THE AVAYA WEBSITE, HTTP://SUPPORT.AVAYA.COM/LICENSEINFO OR SUCH SUCCESSOR SITE AS DESIGNATED BY AVAYA, ARE APPLICABLE TO ANYONE WHO DOWNLOADS, USES AND/OR INSTALLS AVAYA SOFTWARE, PURCHASED FROM AVAYA INC., ANY AVAYA AFFILIATE, OR AN AVAYA CHANNEL PARTNER (AS APPLICABLE) UNDER A COMMERCIAL AGREEMENT WITH AVAYA OR AN AVAYA CHANNEL PARTNER. UNLESS OTHERWISE AGREED TO BY AVAYA IN WRITING, AVAYA DOES NOT EXTEND THIS LICENSE IF THE SOFTWARE WAS OBTAINED FROM ANYONE OTHER THAN AVAYA, AN AVAYA AFFILIATE OR AN AVAYA CHANNEL PARTNER; AVAYA RESERVES THE RIGHT TO TAKE LEGAL ACTION AGAINST YOU AND ANYONE ELSE USING OR SELLING THE SOFTWARE WITHOUT A LICENSE. BY INSTALLING, DOWNLOADING OR USING THE SOFTWARE, OR AUTHORIZING OTHERS TO DO SO, YOU, ON BEHALF OF YOURSELF AND THE ENTITY FOR WHOM YOU ARE INSTALLING, DOWNLOADING OR USING THE SOFTWARE (HEREINAFTER REFERRED TO INTERCHANGEABLY AS “YOU” AND “END USER”), AGREE TO THESE TERMS AND CONDITIONS AND CREATE A BINDING CONTRACT BETWEEN YOU AND AVAYA INC. OR THE APPLICABLE AVAYA AFFILIATE (“AVAYA”).

Avaya grants you a license within the scope of the license types described below, with the exception of Heritage Nortel Software, for which the scope of the license is detailed below. Where the order documentation does not expressly identify a license type, the applicable license will be a Designated System License. The applicable number of licenses and units of capacity for which the license is granted will be one (1), unless a different number of licenses or units of capacity is specified in the documentation or other materials available to you. “Software” means Avaya’s computer programs in object code, provided by Avaya or an Avaya Channel Partner, whether as stand-alone products, pre-installed , or remotely accessed on hardware products, and any upgrades, updates, bug fixes, or modified versions thereto. “Designated Processor” means a single stand-alone computing device. “Server” means a Designated Processor that hosts a software application to be accessed by multiple users. “Instance” means a single copy of the Software executing at a particular time: (i) on one physical machine; or (ii) on one deployed software virtual machine (“VM”) or similar deployment.

License types

Designated System(s) License (DS). End User may install and use each copy or an Instance of the Software only on a number of Designated Processors up to the number indicated in the order. Avaya may require the Designated Processor(s) to be identified in the order by type, serial number, feature key, Instance, location or other specific designation, or to be provided by End User to Avaya through electronic means established by Avaya specifically for this purpose.

Concurrent User License (CU). End User may install and use the Software on multiple Designated Processors or one or more Servers, so long as only the licensed number of Units are accessing and using the Software at any given time. A “Unit” means the unit on which Avaya, at its sole discretion, bases the pricing of its licenses and can be, without limitation, an agent, port or user, an e-mail or voice mail account in the name of a person or corporate function (e.g., webmaster or helpdesk), or a directory entry in the administrative database utilized by the Software that permits one user to interface with the Software. Units may be linked to a specific, identified Server or an Instance of the Software.

Copyright

Except where expressly stated otherwise, no use should be made of materials on this site, the Documentation, Software, Hosted Service, or hardware provided by Avaya. All content on this site, the documentation, Hosted Service, and the Product provided by Avaya including the selection, arrangement and design of the content is owned either by Avaya or its licensors and is protected by copyright and other intellectual property laws including the sui generis rights relating to the protection of databases. You may not modify, copy, reproduce, republish, upload, post, transmit or distribute in any way any content, in whole or in part, including any code and software unless expressly authorized by Avaya. Unauthorized reproduction, transmission, dissemination, storage, and or use without the express written consent of Avaya can be a criminal, as well as a civil offense under the applicable law.

Third Party Components

“Third Party Components” mean certain software programs or portions thereof included in the Software or Hosted Service may contain software (including open source software) distributed under third party agreements (“Third Party Components”), which contain terms regarding the rights to use certain portions of the Software (“Third Party Terms”). As required, information regarding distributed Linux OS source code (for those Products that have distributed Linux OS source code) and identifying the copyright holders of the Third Party Components and the Third Party Terms that apply is available in the Documentation or on Avaya’s website at: http://support.avaya.com/Copyright or such successor site as designated by Avaya. You agree to the Third Party Terms for any such Third Party Components

Note to Service Provider

The Product or Hosted Service may use Third Party Components subject to Third Party Terms that do not allow hosting and require a Service Provider to be independently licensed for such purpose. It is your responsibility to obtain such licensing.

Preventing Toll Fraud

“Toll Fraud” is the unauthorized use of your telecommunications system by an unauthorized party (for example, a person who is not a corporate employee, agent, subcontractor, or is not working on your company's behalf). Be aware that there can be a risk of Toll Fraud associated with your system and that, if Toll Fraud occurs, it can

result in substantial additional charges for your telecommunications services.

Avaya Toll Fraud intervention

If you suspect that you are being victimized by Toll Fraud and you need technical assistance or support, call Technical Service Center Toll Fraud Intervention Hotline at +1-800-643-2353 for the United States and Canada. For additional support telephone numbers, see the Avaya Support website: http://support.avaya.com or such successor site as designated by Avaya. Suspected security vulnerabilities with Avaya products should be reported to Avaya by sending mail to: securityalerts@avaya.com.

Trademarks

The trademarks, logos and service marks ("Marks") displayed in this site, the Documentation, Hosted Service(s), and Product(s) provided by Avaya are the registered or unregistered Marks of Avaya, its affiliates, or other third parties. Users are not permitted to use such Marks without prior written consent from Avaya or such third party which may own the Mark. Nothing contained in this site, the Documentation, Hosted Service(s) and Product(s) should be construed as granting, by implication, estoppel, or otherwise, any license or right in and to the Marks without the express written permission of Avaya or the applicable third party.

Avaya is a registered trademark of Avaya Inc.

Aura is a registered trademark of Avaya Inc.

Flare is a registered trademark of Avaya Inc.

one-X is a registered trademark of Avaya Inc.

All non-Avaya trademarks are the property of their respective owners. Linux® is the registered trademark of Linus Torvalds in the U.S. and other countries.

Downloading Documentation

For the most current versions of Documentation, see the Avaya Support website: http://support.avaya.com, or such successor site as designated by Avaya.

Contact Avaya Support

See the Avaya Support website: http://support.avaya.com for Product or Hosted Service notices and articles, or to report a problem with your Avaya Product or Hosted Service. For a list of support telephone numbers and contact addresses, go to the Avaya Support website: http://support.avaya.com (or such successor site as designated by Avaya), scroll to the bottom of the page, and select Contact Avaya Support.

Contents

Chapter 1: Introduction ... 6
Purpose ... 6
Intended audience ... 6
Related resources ... 6
Related documentation ... 6
Viewing Avaya Mentor videos ... 7
Support ... 7
Chapter 2: Overview ... 8
The Avaya E169 IP Media Station ... 8
Product compatibility ... 11
General specifications ... 12
Connectivity specifications ... 12
Port matrix ... 13
Supported codecs ... 14
Chapter 3: Administration ... 15
Administration overview ... 15
Avaya Aura® administration ... 16
Avaya IP Office administration ... 16
Dialing plan administration ... 17
Upgrade script file ... 20
Settings file options ... 20
Advanced provisioning options ... 24
Media station app parameter descriptions ... 25
Chapter 4: Initial setup and connectivity ... 29
Hardware installation checklist ... 29
Preparing the media station for installation ... 29
Media station rear panel connectors and controls ... 30
Connectivity ... 31
Positioning the media station ... 31
Connecting a smartphone ... 31
Connecting a tablet ... 35
Connecting the handset ... 37
Connecting to your network ... 38
Connecting to AC power ... 39
Software installation ... 40
Downloading the media station app ... 40
Turning on the media station ... 41
Connecting smart devices with Bluetooth pairing ... 42
Connecting the media station to a smart device as a USB accessory ... 43

Registering the media station app and signing in the first time..... 43
Media station registration..... 44
Chapter 5: Maintenance..... 46
Updating the media station app..... 46
Updating the media station firmware..... 46
Removing and replacing a cable sleeve..... 47
Chapter 6: Troubleshooting..... 48
Frequently Asked Questions..... 48
Removing Bluetooth connections and subscriptions..... 50
Reverting the media station to the previous version of firmware..... 51
Resetting the media station to factory defaults..... 52
The media station app displays the Not Connected (Network) message..... 53
Resolving a Not Connected (Network) message..... 53

Chapter 1: Introduction

Purpose

This document provides installation, configuration, initial administration, and basic maintenance checklists and procedures.

Intended audience

This document is intended for people who install and configure a verified reference configuration at a customer site.

Related resources

Related documentation

See the following related documents at support.avaya.com.

Title	Use this document to:	Audience
Overview		
Avaya E169 IP Media Station Overview and Specification	Get an understanding of the product and the features available to users.	Purchasers, implementers, users
Implementing		
Installing and Maintaining the Avaya E169 IP Media Station	Understand how to install, administer, and maintain the product.	Implementers, system administrators
Administering Avaya 9601/9608/9608G/9611G/9621G/ 9641G IP Deskphones SIP	Understand how to administer 9600-series deskphones, which is similar to how you administer the media stations.	Implementers, system administrators
Using		
Using the Avaya E169 IP Media Station	Learn how to install, use, and maintain the product.	Users

Title	Use this document to:	Audience
Avaya E169 IP Media Station Quick Reference	Learn how to use the key features of the product.	Users

Viewing Avaya Mentor videos

Avaya Mentor videos provide technical content on how to install, configure, and troubleshoot Avaya products.

About this task

Videos are available on the Avaya Support website, listed under the video document type, and on the Avaya-run channel on YouTube.

Procedure

- To find videos on the Avaya Support website, go to support.avaya.com and perform one of the following actions:
  - In **Search**, type `Avaya Mentor Videos` to see a list of the available videos.
  - In **Search**, type the product name. On the Search Results page, select **Video** in the **Content Type** column on the left.
- To find the Avaya Mentor videos on YouTube, go to www.youtube.com/AvayaMentor and perform one of the following actions:
  - Enter a key word or key words in the Search Channel to search for a specific product or topic.
  - Scroll down Playlists, and click the name of a topic to see the available list of videos posted on the website.

Note:

Videos are not available for all products.

Support

Go to the Avaya Support website at http://support.avaya.com for the most up-to-date documentation, product notices, and knowledge articles. You can also search for release notes, downloads, and resolutions to issues. Use the online service request system to create a service request. Chat with live agents to get answers to questions, or request an agent to connect you to a support team if an issue requires additional expertise.

Chapter 2: Overview

The Avaya E169 IP Media Station

The Avaya E169 IP Media Station is a VoIP SIP deskphone with which you can use your smart device on your enterprise telephony system. The media station provides:

- A standalone SIP deskphone on your enterprise system
- Two functional line appearances that provide options to hold calls, transfer calls, and set up a conference call
- A charging station for your smart device
- A high-quality Bluetooth-enabled speakerphone
- The capability to make calls through a SIP line or through the smart device cellular network

Bring Your Own Device (BYOD)

The Avaya E169 IP Media Station supports the most popular iOS and Android smart devices that enterprise workers use. The media station facilitates enterprise-grade integration with Avaya Aura® Release 6.2 FP3 and later and Avaya IP Office Release 9.0.3 and later telephony servers.

The media station app can route calls over the wired SIP network of the telephony server or over the wireless network of the cellular carrier. Whether the calls route over SIP or the wireless network, the media station speakerphone or wired handset provides unmatched audio quality.

Bluetooth

You can connect your smart device to the media station using Bluetooth to provide a high-quality speakerphone when making calls on your device. You can also use Bluetooth for playing audio streams from your device. As with all Bluetooth devices, audio quality can vary based on the quality of the Bluetooth signal from the smart device.

Important:

You can pair many smart devices with a media station, but only one can be active at a time.

High-quality sound

The speakerphone and microphones on the media station provide unmatched sound quality. The media station has six broadband speakers, four digital microphones, and one passive radiator. This unique and innovative acoustic design uses the speakerphone in hands-free mode with unequaled quality. You can use the media station for large conference calls or listen to your music or podcasts.

These innovative technologies improve performance by using wide-band or high definition codec G. 722. Conventional telephony encodes speech at bandwidths ranging from 300 Hz to 3400 Hz. As a result, the media station only transmits the most essential part of the human voice. The media station encodes the human voice using bandwidths ranging to 8 kHz. These bandwidths also pick up voice harmonics: the natural quality of the human voice, a sense of the physical presence of the speaker, and the space around the person.

You can discern every nuance of the human voice. The media station reduces nasal sounds and you can discern similar sounding consonants such as S and F. You no longer need to repeat as your conferences are now crystal clear and stress-free.

Power to charge your smart devices

The media station uses Power over Ethernet (PoE) and an optional AC power adapter. With this power arrangement, you can charge your smart devices when you connect your devices to the media station.

Note:

Some smart devices require more charging power than the media station provides. Your smart device might charge slower than when connected to the native AC power adapter of the device. If the device does not charge well enough when connected to the media station, you must charge the device using the native AC power adapter.

Core telephony features

- Two functional line appearances
- Hold and resume
- Message waiting indicator and voice mail dial access button
- Transfer
- Three-way conference

Using Avaya softphone apps with the media station

Avaya supports a growing number of softphone applications for both iOS and Android platforms. Avaya Flare® Communicator for iPad Devices and Avaya Communicator for Android are examples of Avaya softphone apps.

If you are already a user of such an app, you can use this app with the media station in the following way:

- Create a Bluetooth pairing between the app and the media station.
- Connect your smart device over Bluetooth or USB to the media station when you want to use it as your audio device.

Interactions with other Avaya apps

Avaya recommends that you only use one Avaya app at a time because of interactions between the apps.

The media station operates as a Bluetooth speakerphone for Avaya Flare® Communicator for iPad Devices, Avaya one-X® Communicator, and other Avaya mobile apps. The media station does not support native call control of those apps.

When the media station detects registration from two different Avaya apps, the media station automatically unregisters from the apps. You must manually register the media station. See the following scenario for this interaction:

1. You have an iPhone with the Avaya Media Station and Avaya one-X® Mobile apps installed.
2. You connect the device to the media station with the Avaya Media Station app and you sign on with extension 1234.
3. The Avaya one-X® Mobile app attempts to register with the same extension.
4. The media station signs out from extension 1234 and the Avaya Media Station app opens on the smart device.
5. You sign in again to extension 1234 using the Avaya Media Station app.

When you have Avaya EC500 administered on a smartphone that you register with the media station, Avaya recommends that you disable Avaya EC500. If you do not disable Avaya EC500, the following might occur:

- You receive a SIP call on the media station at the same time you receive a cellular network call on your smartphone.
- If you try to answer the SIP call by pressing the **Call/Volume** button or picking up the handset, you connect to the cellular network call.
- This interaction occurs because the default smartphone app of iOS and Android devices put focus on the cellular call. This means that you cannot answer the SIP call when you also enable Avaya EC500 on the smartphone.

Sharing the same extension on softphone apps and the media station (Avaya Aura® only)

If you log on to the same extension on both your softphone app and the media station app, you will see the following behavior:

- When your smart device disconnects from the media station, the two endpoints operate independently and have a Multiple Device Access (MDA) relationship between them.
- When you connect your smart device to the media station with USB or Bluetooth, the media station automatically logs out, or unregisters, the registered extension. The message **Prevent Dual App** on both the handset and media station app.
- When you disconnect the smart device from the media station, the media station automatically logs on, or registers, with the previously provisioned extension.

Product compatibility

The media station operates on the most popular Avaya telephony servers, supports a wide array of smart devices, and supports a select set of USB headsets. Check the media station support site regularly for updates to the product compatibility with new smart devices and headsets.

Telephony servers

The media station operates with the following telephony servers:

- Avaya Aura® Release 6.2 FP3 and later
- Avaya IP Office Release 9.0.3 and later

Operating systems and smart devices

The media station supports the following operating systems and smart devices:

Operating system	Smart device
iOS Version 6.0 and later	• iPhone 5s • iPhone 5c • iPhone 5 • iPhone 4s

Operating system	Smart device
	• iPhone 4 • iPad 2 or later with or without Retina Display • iPad Air • iPad Mini
Android Version 4.1–4.3, aka Jelly Bean Android Version 4.4, aka Kit Kat	• Samsung S3 • Samsung S4 • Samsung Note 3 • Samsung Tab 2 • Samsung Tab 3

Headsets

The media station is compatible with the following headsets:

- Jabra 9460 USB Headset
- Jabra 9470 USB Headset

General specifications

- Line Protocol: Session Initiation Protocol (SIP)
- Power Supply: 100-240 V / 12 V 3A AC adapter
- Dimensions: 29 x 11 in., 5 x 5.25 cm (media station); 17.8 x 5 in., 1 x 3.2 cm (handset)
- Weight: 5.5 lbs; 2.5 kg
- Operating temperature: 32° – 95° F, 0° – 35° C
- Operating humidity: 10% – 90%

Connectivity specifications

- Bluetooth® v2.1 +EDR with audio profiles HFP and A2DP
- Two 1 Gbps Ethernet ports

  The LAN port provides network connectivity for the media station. The PC port is for connecting your computer to the LAN by way of a built-in LAN switch in the media station.

  If the network connection provides adequate Power over Ethernet (PoE) support, the media station can operate without the AC power adapter. The PoE requirement for the media station is 802.3at. 802.3at supports Class 4 devices and guarantees power output of 30 W with a minimum output of about 15.4 W. PoE provides power enough to charge many supported smart devices.

- Two USB 2.0 ports

  Primarily, one port is for the USB handset and one port is for the smart device. You can connect a USB headset to one of the ports if you connect your smart device by Bluetooth or if you choose to not use the handset.

  Note:

  Some smart devices require more charging power than the media station provides. Your smart device might charge slower than when connected to its native AC power adapter. If the device does not charge well enough when connected to the media station, you must charge it using its native AC power adapter.

- One 3.5 mm headset jack

  The headset jack is not supported in this release. You can use the following USB headsets:

  - Jabra 9460 USB Headset
  - Jabra 9470 USB Headset

- One AC power adapter port

  The media station comes with a 100–240 V switching power supply that has localized outlet connectors.

- USB cables for smart devices

  The media station comes with three USB cables that fit many smart devices:

  - Apple Lightning cable
  - Apple 30–pin cable
  - Micro-USB cable

  You must provide your own USB cable for devices that are incompatible with the media station USB cables.

Port matrix

The following table lists the ports used by the media station.

Local Port	Destination Port	Purpose	Transport Protocol
32768-61000	22	SSH	TCP
67, 68	66, 67	DHCP	UDP
32768-61000	53	DNS	UDP
32768-61000	80	HTTP	TCP
32768-61000	443	HTTPS	TCP
123	123	NTP	UDP
32768-61000	161	SNMP	UDP
32768-61000	514	Syslog	UDP

Local Port	Destination Port	Purpose	Transport Protocol
Variable	Configurable, with default of 5060	SIP Signaling	TCP
Variable	Configurable, with default of 5060	SIP Signaling	UDP
Variable	Configurable, with default of 5061	SIP Signaling	TLS
32768-61000	Variable	RTP	UDP

Supported codecs

- Narrowband: G.711a, G.711µ, G.729a
- Wideband: G.722–64K

Chapter 3: Administration

Administration overview

Administration of a media station is similar to that done on the Avaya 9600 series IP deskphones. You will use upgrade files, settings files, and firmware files hosted on a telephony or HTTP server.

Document references

Since the administration of a media station is similar to that done with 9600 series IP deskphones, use the following documents if you need more details:

- *Administering Avaya one-X® Deskphone SIP for 9620/9620C/9620L/9630/9630G/9640/9640G/9650/9650C IP deskphones*
- *Avaya one-X™ Deskphone SIP Installation and Maintenance Guide*
- *Administering Avaya 9601/9608/9608G/9611G/9621G/9641G IP Deskphones SIP*
- *Installing and Maintaining Avaya 9601/9608/9608G/9611G/9621G/9641G IP Deskphones SIP*

Administration zip file

With the media station product, you can download a zip file that contains the following support files:

- Upgrade script file template
- Settings file template
- Current firmware update file

Use the template files to set your administration parameters for the media station.

Upgrade script file

When shipped from the factory, the media station might not contain the latest firmware. When the media station is first plugged in, it will attempt to contact a file server so that it can download the latest version of firmware.

Use the upgrade script file to identify where the firmware file is located for doing a firmware update. When you receive a new version of firmware from Avaya, put the firmware at this location and the media station will be updated automatically.

The upgrade script file must be named `E1x9MSUpgrade.txt`.

Settings file

Use the settings file to set the parameters required to administer the media station app. Ideally, the only options you want the user to manually enter in the media station app is their phone number and password. The upgrade script file references the settings file. Do not use the same settings file for the media station and other Avaya endpoints.

For consistency, name this file `E169settings.txt`.

Advanced provisioning options

The media station app supports alternative methods to administer the media station parameters:

- The Alternative Provisioning URL option allows you to set an alternative location from where the settings file can be downloaded.
- The Provisioning Group option allows you to set a special provisioning group for a settings file.

Avaya Aura® administration

You can administer media stations to work with Avaya Avaya Aura® Release 6.2 FP3 and later.

Consider the following when administering the media station on Avaya Aura®:

- Administer SIP lines on Avaya Aura® Communication Manager systems using Avaya Aura® System Manager and the native Avaya Aura® Communication Manager administration. If the user is not already using a SIP deskphone, administer the SIP line as an Avaya 9630 SIP deskphone.
- Administer Multiple Device Access (MDA) for the media station. There are limitations for MDA with the media station, but MDA is still recommended. For example, the media station cannot pick up a call that is active on another MDA device.
- The media station supports up to two line appearances regardless of how many line appearances are administered for the SIP line.
- The media station supports either TCP or TLS as the SIP signaling protocol.
- The media station cannot use any feature buttons administered on the SIP line.
- Each media station consumes a license seat the same as other SIP stations.

Document reference

See *Administering Avaya 9601/9608/9608G/9611G/9621G/9641G IP Deskphones SIP* or *Administering Avaya one-X® Deskphone SIP for 9620/9620C/ 9620L/9630/9630G/9640/9640G/ 9650/9650C IP deskphones* for detailed information about administering SIP lines.

Avaya IP Office administration

You can administer media stations to work with Avaya IP Office Version 9.0.3 and later.

General requirements

Consider the following requirements when administering the media station on IP Office:

- You can store the media station upgrade file, settings file, and firmware upgrade script on the built-in IP Office HTTP server.
- When creating an extension for a media station user, select **SIP Extension**.

- The G.711 codec is required. The G.722 codec is optional.
- TCP is the recommended SIP signaling protocol. Optionally, you can use UDP.
- Avaya SBC Enterprise and Remote Worker are supported.
- Each media station consumes an Avaya IP Endpoints license seat the same as other Avaya SIP endpoints.

Limitations

Consider the following limitations when administering the media station on IP Office:

- You must store the media station binary firmware image on a separate HTTP server. See the media station release notes for more information.
- The media station supports either TCP or TLS as the SIP signaling protocol.
- You must connect the media station using the Avaya IP Endpoints license, not a 3rd Party Endpoints license.
- Directory information is not available from the system.

Document reference

See *Administering Avaya 9601/9608/9608G/9611G/9621G/9641G IP Deskphones SIP* or *Administering Avaya one-X® Deskphone SIP for 9620/9620C/ 9620L/9630/9630G/9640/9640G/ 9650/9650C IP deskphones* for detailed information about administering SIP lines.

Dialing plan administration

How dialing plans work

The deployment of a dialing plan in an enterprise consists of rules for telephony servers and rules for endpoints. The combination of the dialing plan rules affects how users make calls to users within the enterprise and to users outside the enterprise.

On an endpoint, the endpoint uses dialing rules that control automatic addition or deletion of dialed digits based on options set on the endpoint. For example, if a dialed number matches a specific pattern, the rules add some digits and delete some digits.

As one of several dialing plan methods, Avaya telephony servers often use the E.164 ITU-T international public telecommunication numbering plan recommendation. E.164 telephone numbers use the following pattern:

+CountryCode-NationalDestinationCode-SubscriberNumber

For example, the pattern +1-202-5551212 is an E.164 telephone number in the United States.

A telephony server configured to support E.164 ensures that calling the same number reaches the same destination, regardless from where the call was made. For example, the user should not be required to know the specific prefix digit or international code when making the call from different locations.

You can blend E.164 support with other dialing plan methods such as direct extension calling. The telephony server identifies an E.164 telephone number, determines that the number is actually a local enterprise telephone number, and will not apply the dialing rules.

How the media station interacts with the enterprise dialing plan

Similar to any other enterprise endpoint, the telephony server processes calls made from the media station and might apply the dialing plan rules. This section describes rules and options for the media station that makes it easier for users to dial calls using the native contacts on smartphones.

Smartphone users create contacts on their devices that work with their cellular network. Users do not take into account how a telephony server might process those numbers using rules defined on the telephony server. You must administer the enterprise telephony server so that the user's contacts work seamlessly whether the users are dialing over the enterprise network or over the cellular network. For example, a user might have an international prefix included as part of a contact's telephone number, maybe 012. You must instruct the user to adminster the media station app so that the call routes when made over the enterprise telephony server or the user's cellular network.

Recommended dialing plan setup

Depending on your local enterprise dialing plan, dialing plans have too many variables to define a single recommendation that works for all installations and users. Here are several suggestions to help you administer the enterprise telephony server and media station app so that the dialing plan works in most scenarios.

Important:

Other configurations schemes and rules are available and the system administrator must decide how to configure the enterprise telephony server.

For international calls:

- Administer dialing rules the enterprise telephony server to support the E.164 dialing plan. Use the Avaya Aura® and Avaya IP Office documentation to administer E.164.
- Instruct media station users to adopt the E.164 scheme for their international contacts. The user might need to manually change some contacts on their smart device.

For domestic in-country calls, administer the enterprise telephony server dialing plan to support dialing domestic numbers the same way done from a mobile device.

For enterprise premises calls, administer the enterprise telephony server dialing plan so that users can dial other enterprise users by specifying the extension number only. Using a dialing plan for local enterprise users allows faster calling to enterprise contacts. Ensure that a user can reach the endpoint using an associated domestic or E.164 number.

Dialing plan options on the media station

The media station app has three options to define how the media station dials telephone numbers. Users can dial telephone numbers manually or by using Contacts on a smart device.

Prefix: Defines the digit or digits added to a dialed string. A prefix is commonly used to gain access to the public switched telephone network. For example, many telephony servers use the digit 9 to gain access to a public switched network.

Numbering Plan: Defines the country numbering plan used for all calls. The media station app supports 203 different country numbering plans. The media station app selects the default numbering plan based on the locale of the smart device.

Converts '+': Defines whether the media station app converts dialed telephone numbers.

- If disabled, the media station app does not convert the telephone number. The telephony server must manage the dialing plan.
- If enabled, the media station app converts the dialed numbers based on the country numbering plan and the telephone number entered.

Telephone number conversion examples

The following tables show examples how the telephony server converts telephone numbers using different conversion techniques. The E.164 rules control the conversions marked E.164. The Landlines rules are local to certain countries where mobile telephone and landline telephone numbers have different dial plans.

United States Numbering Plan Examples

Dialed Telephone Number	Conversion Method	Transmitted Telephone Number
+33 1 23 45 67 89	E.164	+33123456789
011 33 1 23 45 67 89	E.164	+33123456789
+33 1 23 45 67 89	Landline	01133123456789
011 33 1 23 45 67 89	Landline	01133123456789
312-555-1212	E.164	+13125551212
1-312-555-1212	E.164	+13125551212
555-1212	Not converted	5551212
312-555-1212	Landline	13125551212
1-312-555-1212	Landline	13125551212
555-1212	Not converted	5551212

France Numbering Plan Examples

Dialed Telephone Number	Conversion Method	Transmitted Telephone Number
+33 1 23 45 67 89	E.164	+33123456789
00 33 1 23 45 67 89	E.164	+33123456789
01 23 45 67 89	E.164	+33123456789
+33 1 23 45 67 89	Landline	0123456789
00 33 1 23 45 67 89	Landline	0123456789
01 23 45 67 89	Landline	0123456789
+1 312-555-1212	E.164	+13125551212
00 1-312-555-1212	E.164	+13125551212
+1 312-555-1212	Landline	0013125551212
00 1-312-555-1212	Landline	0013125551212

Upgrade script file

The upgrade script file uses the `E169settings.txt` settings file to download parameters to the media station. You also use the upgrade script file to make firmware upgrades available to media station users. The script file is located on the same server as the settings file.

Upgrade script files follow the same syntax as those used with the Avaya 9600-series IP deskphone. For more information about upgrade script files, see *Administering Avaya 9601/9608/9608G/9611G/9621G/9641G IP Deskphones SIP* or *Administering Avaya one-X® Deskphone SIP for 9620/9620C/ 9620L/9630/9630G/9640/9640G/ 9650/9650C IP deskphones*.

The upgrade script file must be named `E1x9MSUpgrade.txt`.

Important:

The firmware update feature is for development purposes only and is not normally used in a production environment.

The upgrade script file is located on the customer's HTTP server. The media station parameter **DHCP IP Address** identifies the server where it looks for the upgrade script file. The option for this in the settings file is **HTTPSRVR**. You can also control this location from the **Alternative Provisioning URL** option on the media station app. The **APPNAME** option in the upgrade script file identifies the name of the firmware upgrade file.

The **DOCK_FW_INTERVAL** parameter in the settings file defines sets how often the media station checks for new firmware. When the interval is reached, the media station polls the upgrade script file to download and install new firmware. This only occurs when a user is no longer on an active call. The installation occurs automatically and the media station reboots in about 90 seconds.

Settings file options

A settings file is used to define and upload administration parameters required by the media station. The settings file you use is similar to the one you would use on Avaya 9600 series and 4600 series IP deskphones. Once a media station uploads the administration parameters from the settings file, the user only has to enter their user name and password to register the media station app.

Settings file general parameters

Parameter name	Default value	Description and value range
CONTROLLER_SEARCH_INTERVAL	16	The time in seconds that the phone waits to complete the maintenance check for monitored controllers. Valid values are 4–3600 seconds.
DNSSRVR	0.0.0.0	Text string containing the IP address of zero or more DNS servers. Enter the IP addresses, in dotted-decimal format, separated by commas with no intervening spaces. Valid values are 0–255 ASCII characters, including commas.

Parameter name	Default value	Description and value range
DSCPAUD	46	Differentiated Services Code Point (DSCP) for audio. Values range from 0–63.
DSCPSIG	34	DSCP for signaling. Values range from 0–63.
HTTPSRVR	0.0.0.0	A list of IP addresses or DNS names of HTTP file servers used to download upgrade script files, settings files, and firmware.
L2Q		Controls 802.1Q tagging mode: • 0 = auto • 1 = on • 2 = off
L2QVLAN		802.1Q VLAN Identifier. Valid values are 0–4094. Null (" ") is not a valid value and the value cannot contain spaces. This parameter is preserved in RAM which survives reset and stored to flash (as L2QVLAN_INIT) only upon successful registration. This value is initialized from L2QVLAN_INIT after power-up. This value will not be initialized from L2QVLAN_INIT after reset, but
LOGSRVR		Syslog server IP or DNS address. 0–255 characters: zero or one IP Addresses in dotted decimal or DNS name format.
MSGNUM		Voice mail system telephone number dialed when the user presses the **Voice Mail** button on the media station or taps the **You have a message** prompt on the media station app. For Avaya IP Office, the default voice mail system number is *17.
OUTBOUND_SUBSCRIPTION_REQUEST_DURATION	3600	Number of seconds used in initial SUBSCRIBE messages. This is the suggested duration value of the deskphone, which might be lowered by the server, depending on the server configuration. Range is 60–31536000 — one year. The default value is equal to one day. The maximum value represents one year.
PHNEMERGNUM		The number dialed when the Emergency softkey is pressed on the handset.
RECOVERYREGISTERWAIT	300	Reactive monitoring interval in seconds for failover. Valid values are 10–36000.
SIP_CONTROLLER_LIST	Null	The list of SIP proxy or registrar server IP or DNS addresses. Servers used to address SIP registrations and signaling, if operating in proxy mode. When operating in an Avaya Aura® environment, SIP_CONTROLLER_LIST is also used to access the Personal Profile Manager (PPM).

Parameter name	Default value	Description and value range
		This parameter is considered the list of Configured Controllers for failover logic. When this parameter has multiple IP Addresses, the ordering of the list defines the priority of the controllers for selection during failover; the first element of the list is the highest priority, the last element is the lowest priority. Failover is not supported with IP Office. Format: host[:port][;transport=xxx] where host is an IP address in dotted decimal format or DNS name, port is the optional port number (if not specified, the default port value of 5060 for UDP and TCP or 5061 for TLS is used), transport is the optional transport type (where xxx is tls, tcp, or udp) and if not specified, the default value of TLS is used. The first element of this parameter (if applicable) has the highest precedence within the parameter. This parameter can have 0 to 255 characters indicating zero or more IP addresses in dotted decimal or DNS name format, separated by commas without any intervening spaces. **Note:** For Avaya Aura®, do not change the port through the CRAFT menu or through System Manager when you are logged in to a deskphone. In both cases, the deskphone reestablishes a link to Session Manager, which can lead to unpredictable issues. For example, signaling issues where you can make calls through the deskphone, but cannot receive calls. To change the port, logout from the deskphone, then change the port as required and log in to the deskphone again
SIPDOMAIN	Null	SIP domain name for registration. Valid values are 0–255 characters, a string representing domain name. For Avaya Aura®, you must use a SIP domain name as defined with Session Manager. You cannot use an IP address. For IP Office, you can use the IP address of the IP Office server. If the IP Office system is part of a DNS network, use that network's domain name.
SNMPADD	Null	Text string containing zero or more allowable source IP Addresses for SNMP queries, in dotted decimal or DNS format, separated by commas, with up to 255 total ASCII characters including commas and no intervening spaces.
SNMPSTRING	Null	Text string containing the SNMP community name string. Range is 0–32 ASCII characters, no spaces.
SYSLOG_MODE		Type of messages sent. Allowed values: disabled, errors, event, full.

Parameter name	Default value	Description and value range
TCP_KEEP_ALIVE_INTERVAL	0	Time interval in seconds after which TCP keep-alive packets are retransmitted. The interval is started by the system TCP stack (when TCP keep-alive is enabled with specified time intervals). Values are 0–60 seconds.
TCP_KEEP_ALIVE_STATUS	1	Specifies whether the media station sends TCP keep-alive messages. Values are: • 0 = TCP keep-alive messages not sent • 1 = TCP keep-alive messages sent
TCP_KEEP_ALIVE_TIME	0	The time interval in seconds the media station sends a TCP keep-alive message. The time is controlled by the system TCP stack. The timer restarts after application level data (for example, a SIP message) is sent over the socket. When the system is idle, this keep-alive time expires and results in sending a TCP ACK (keep-alive) packet. Valid values are 0–3600 seconds. A value of 0 indicates the timer is disabled.
USE_MEDIA_ENCRYPTION	0	Enables media encryption on the device. • 0 = Disabled • 1 = Enabled

Settings file media station parameters

Parameter name	Default value	Description and value range
DOCK_AUTOMATIC_UNREGISTRATION_TIMER	-1	Controls if and when the media station unregisters from the telephony server. Unregistration occurs when you disconnect a smart device from a USB or Bluetooth connection. • -1 — Media station remains registered after the smart device disconnects • 0 — Media station unregisters immediately after the smart device disconnects • 1–720 — Media station remains registered for administered number of minutes after the smart device disconnects
DOCK_FW_INTERVAL	1440 (24 hours)	Controls how often the media station checks for new settings and firmware. Valid values are 0–10080 minutes. A setting of 0 means the media station never checks for updated settings and firmware.
DOCK_HIDDEN_MENUS		Controls the **Settings** menus users see on the media station app. Valid values are: • ADVANCED_SIP — Hides the advanced SIP options

Parameter name	Default value	Description and value range
		• GLOBAL_VOIP — Hides the SIP trunking wizard • NETWORK — Hides the capability to edit network options
DOCK_SSH_ALLOWED	0	Enables (1) or disables (0) an inbound SSH connection to the media station.

Advanced provisioning options

The media station app supports alternative methods to administer the media station parameters:

- Alternative provisioning URL
- Provisioning group

Alternative provisioning URL

The Alternative provisioning URL is the DNS name or IP address of an HTTP server on the customer network. This server hosts the upgrade script file, the settings files, and the firmware for the media station. The Alternative provisioning URL overrides whatever HTTP server the media station learns about at boot time from option 242 in DHCP scope. The URL can include directories if needed.

The path to the Alternative provisioning URL option depends on the operating system:

- Android: **Settings** > **Avaya Media Station** > **Advanced Parameters** > **Alternative provisioning URL**
- iOS: **Settings** > **Avaya Media Station** > **Network** > **Advanced Parameters** > **Alternative provisioning URL**

Provisioning group

The Provisioning group option allows you to create a special setting to control provisioning options for a group of users. For example, media station users registered on a Session Border Controller might need different options than those connected on Session Manager. The Provision group option allows you to set different options for each group of users.

For more information about the GROUP parameter, see *Administering Avaya 9601/9608/9608G/ 9611G/9621G/9641G IP Deskphones SIP* or *Administering Avaya one-X® Deskphone SIP for 9620/9620C/ 9620L/9630/9630G/9640/9640G/ 9650/9650C IP deskphones*.

The path to the Provisioning group option depends on the operating system:

- Android: **Settings** > **Avaya Media Station** > **Advanced Parameters** > **Provisioning group**
- iOS: **Settings** > **Avaya Media Station** > **Network** > **Advanced Parameters** > **Provisioning group**

Media station app parameter descriptions

You must administer parameters on a smart device to make a connection with the media station. The media station app has other optional parameters that control sounds, Bluetooth connections, and app parameters. The basic account setup parameters are similar whether you are connecting to an Avaya Aura® Communication Manager system with Avaya Aura® Session Manager or an Avaya IP Office system. Users do not need to administer most parameters. You must determine which parameters are required on your particular installation.

For media station users, a settings file automatically sets these options. You can have users manually enter these parameters, but a settings file will apply parameters more completely and accurately. Using a settings file means that user only has to enter their user name and password.

Settings > **Account Setup** > **Add SIP Account**

Name	Description
Username	Enter your telephone number on the telephony server.
Password	Enter the password for your telephone number on the telephony server. For Avaya IP Office, this is the **Telephony Login Code**, not the **User Password** option.
Domain	Enter the company's SIP domain name administered on Avaya Aura® System Manager, for example, acmewearinc.com. This domain name might be different from the company's regular DNS domain name. If your network does not use DNS, enter the IP address of the telephony system providing your SIP line service.

Advanced Parameters

Name	Description
Voicemail	Enter the telephone number for your voice mail system. For Avaya IP Office, the default voice mail system number is *17. **Note:** The **Voicemail** parameter appears under the **Advanced Parameters** when you add a new account. After you add a new account, it appears along with **Username**, **Password**, and **Domain**.
MWI Enabled	Turn this option on to enable notification of waiting voice mails.
Prefix	Defines the digit or digits added to a dialed string. A prefix is commonly used to gain access to the public switched telephone network. For example, many telephony servers use the digit 9 to gain access to a public switched network.
Numbering Plan	Defines the country numbering plan used for all calls. The media station app supports 203 different country numbering plans. The default plan is the United States numbering plan.
Converts '+'	Defines whether the media station app converts dialed telephone numbers. If disabled, the app does not convert the telephone number. The telephony

Name	Description
	server must manage the dialing plan. If enabled, the system converts the dialed numbers based on the country numbering plan and the telephone number entered.
Display Name	Not used with Avaya servers.
Auth. Username	Not used with Avaya servers.
Proxy	Enter the proxy address for the telephony server. For Session Manager, enter one of the following: • The IP address of the Avaya Session Manager system on your intranet. • The IP address of the Avaya Aura Session Border Controller when connecting over the Internet. For IP Office, enter the IP address or FQDN of the IP Office server. **Note:** When the proxy is set by a settings file, information about the SIP transport method and port number often display with this option. You can change those parameters within the **Proxy** option, but you can also set them using the **SIP Transport** and **Port** options.
Registrar	Not used with Avaya servers.
Auto Update NAT	Not used with Avaya servers.
DNS SRV	Not used with Avaya servers.
RTP Port Start	Not used with Avaya servers.
STUN	Not used with Avaya servers.
— STUN Server	Not used with Avaya servers.
SIP Registration	Controls settings for SIP registration. You can leave these at the default values.
— Registration timeout	The default value is 300.
— Session timer	The default value is 1800.
— Min Session expiration	The default value is 90.
— Auto. Unregistration Timer	The default value is -1
SIP Signaling	Enables access to SIP signaling options.
— SIP Transport	The SIP Transport options are UDP, TCP, or TLS. The telephony server administrator defines which will be used for your installation. The recommended value is TCP.
— UDP Port, **TCP Port**, or **TLS Port**	You can manually set the port number or let the system automatically select a port number. The telephony server administrator defines which will be used for your installation. For Avaya IP Office, the recommended value is 5060.
SRTP Settings	Controls settings for Secure Real-time Transport Protocol (SRTP).

Name	Description
SRTP	Enables SRTP. For Avaya Aura®, this must be turned on.
— Encrypt Audio	Defines whether the audio stream is encrypted. For Avaya Aura®, this must be set to **Mandatory**.
— SRTP require secure SIP	Defines whether SRTP requires a secure SIP connection. For Avaya Aura®, this must be set to **TLS**.
Encrypt RTCP	Defines whether RTCP is encrypted. For Avaya Aura®, this must be unchecked to enable SRTP.
TLS Settings	Do not change TLS Settings without guidance from Avaya support.
— CA Certificate	Do not change TLS Settings without guidance from Avaya support.
— Client Certificate	Do not change TLS Settings without guidance from Avaya support.
— Client Private Key	Do not change TLS Settings without guidance from Avaya support.
— Verify TLS Server Cert	Do not change TLS Settings without guidance from Avaya support.
— Verify TLS Client Cert	Do not change TLS Settings without guidance from Avaya support.
QOS Configuration	Controls the layer 3 QOS DSCP tag values.
— Signaling	The default value is 34.
— Audio	The default value is 46.

Settings > **Sounds**

Name	Description
Ringtone type	Sets the ring tone for the media station.
Ring Volume	Sets the default ringing volume for the media station.
Alerts Volume	Sets the default volume for alerts from the media station app.
Music Volume	Sets the default volume for music apps.
Hearing Aid Mode	Enables special software that is compatible when using the handset with hearing aids.

Settings > **Bluetooth** — iOS only

Name	Description
Wireless iAP	Set permanently to **On**.
Hands-Free Profile	
A2DP	Controls whether you can stream audio from a smart device to the media station. Starting with iOS 7.1, turn off A2DP if you do not want to play audio streams from a smart device to the media station.
Status	Shows the current status of Bluetooth pairing between the smart device and the media station.

Name	Description
Start pairing	Enables pairing with your device over Bluetooth. The media station plays the message “Pairing mode: Connecting your device” followed by 2-pitch tone when connected.
Disconnect	Disconnects your Bluetooth pairing. The media station plays the message “Pairing mode stopped.”

Settings > Application

Name	Description
Recent calls — iOS only	Enables the feature that shows a list of your recent calls.
Version	Displays the version of the app.

Settings > Avaya Media Station

Name	Description
Firmware Version	Displays the current firm ware version.
Firmware Status	Displays whether the firmware is up-to-date.
Check Update	Allows you to check for and download firmware updates.
Network	Displays the DHCP or Static networking information for the media station.
VLAN	Allows you to enable VLAN service.
VLAN id	
Advanced Parameters	
— **Alternative provisioning URL**	Allows you to set an alternative location from where the settings file can be downloaded.
— **Provisioning group**	Allows you to set a special provisioning group for a settings file.
HW Address	Displays the mac address of the media station hardware.
Factory Defaults	Resets the media station to factory defaults. If you reset the media station, you must readminister your options.

Settings > Licenses

Name	Description
Application	Displays the license information for the Media Station app.
Avaya Media Station	Displays the license information for the Media Station.

Chapter 4: Initial setup and connectivity

Hardware installation checklist

Preparing the media station for installation

Procedure

1. Remove the parts from the shipping box. Confirm that you have all parts shown in the following table.

Media station base	
Handset	
Handset cradle (packaged with the docking cradles and USB cables)	
AC adapter and adapter plugs	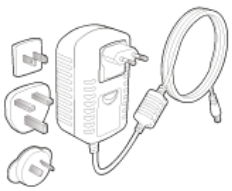

Apple Lightning, Apple 30-pin, and generic micro USB cables (packaged with the docking cradles and handset cradle) **Note:** The Apple 30-pin cable is incompatible with Android devices. You must provide your own Android 30-pin cable.	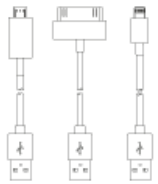
Cable sleeves for the Apple Lightning, Apple 30-pin, and generic micro USB cables (packaged with the USB cables and handset cradle) **Note:** Some Android 30-pin cables might not fit in the cable sleeve. In this case, connect your cable to the back of the media station and set your smart device on your desk.	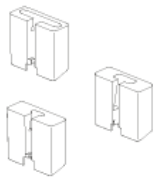
Docking cradles for the Apple Lightning, Apple 30-pin, and generic micro USB cables (packaged with the USB cables and handset cradle)	
Tablet bracket	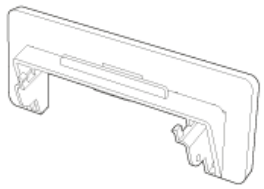

2. Remove any transparent protective film or packing materials from the parts.

Media station rear panel connectors and controls

Icon	Name	Description
	AC Power Input	The connector where you connect the AC power adapter.
	USB Connector (2)	The connectors where you connect USB devices.
	Computer Ethernet Port	The Ethernet connector where you connect a computer.
	Ethernet Port	The connector where you connect the media station to the network.
	Headset	The connector where you connect a headset. Not supported in Release 1.0.

Icon	Name	Description
	Power	The power button.

Connectivity

Positioning the media station

Procedure

Put the media station near the network socket and AC power socket.

For the best sound quality and microphone performance, avoid putting any objects within 8 inches or 20 centimeters of the media station. Comply with this requirement on all sides of the media station, especially the front of the media station.

Connecting a smartphone

Before you begin

Determine the USB cable that your smartphone requires:

- Apple Lightning
- Apple 30-pin
- Generic micro USB

Note:

If none of the USB cables provided with the media station fit your smartphone, you must use the USB cable that came with your smartphone. You might not be able to use the cable sleeve or the docking cradle when you use another USB cable.

Procedure

1. If using a smartphone that you plan to dock on the media station, assemble the cable that your device uses to the required cable sleeve.
   - For devices that use an Apple Lightning cable, insert the cable as shown in the figure with the side that has the raised key on the connector facing up. Slide the connector into the sleeve. The connector will not slide into the sleeve if you have the raised key facing down.

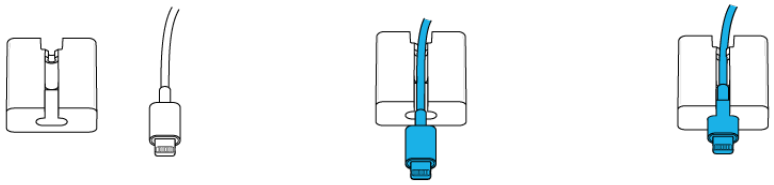

- For devices that use an Apple 30-pin cable, insert the cable as shown in the figure with the side that has the raised key on the connector facing up. Slide the connector into the sleeve. The connector will not slide into the sleeve if you have the raised key facing down.

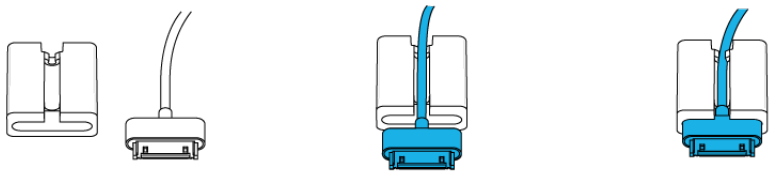

- For devices that use a micro USB cable, insert the cable as shown in the figure with the shorter-width side of the connector facing up. Slide the cable into the sleeve.

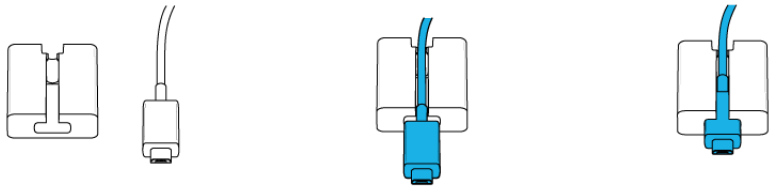

2. Insert the cable sleeve into the slot from the top of the media station.

Warning:

Ensure that you place the sleeve as shown in the following diagram. If you insert the sleeve the wrong way, the sleeve might get stuck in the media station.

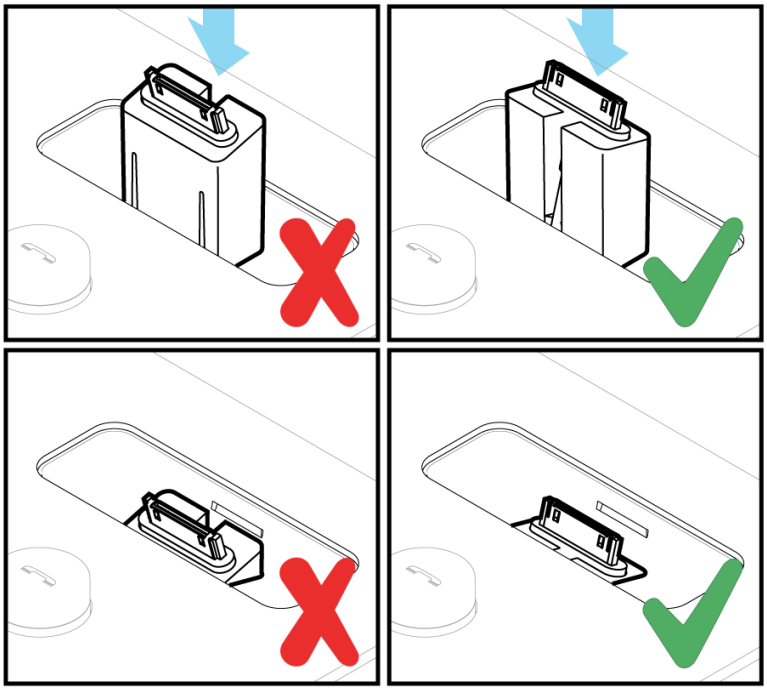

3. Route the USB cable under the media station and through the cable channels as shown in the following diagram.

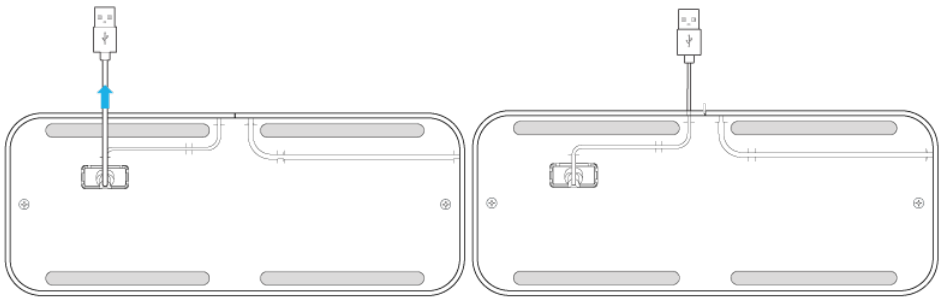

4. Plug the USB cable into the left USB port on the rear of the media station.

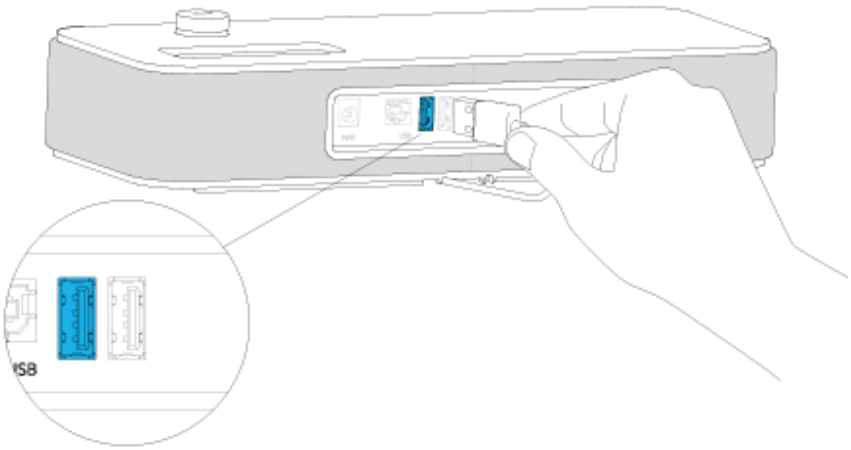

5. Insert the docking cradle into the base that matches the USB cable that you are using. If your smartphone has a case that does not fit in the cradle, do not install the cradle or take the case off the smartphone.

6. Plug your smartphone into the media station.

Important:

If your smartphone does not fit on the media station docking cradle, use the USB cable that came with your smartphone. Plug your smartphone into the USB port on the rear of the media station.

Connecting a tablet

Before you begin

Get the USB cable that came with your tablet.

About this task

Caution:

While connecting and installing your tablet, maintain a firm grip so that the tablet does not accidentally fall off the tablet bracket. When the tablet is on the bracket, the tablet is secure enough for normal use.

Tip:

To remove the tablet bracket, ensure that the power button is in the on position .

Procedure

1. Install the tablet bracket by gently rotating the bracket into position until you feel the bracket snap into position.

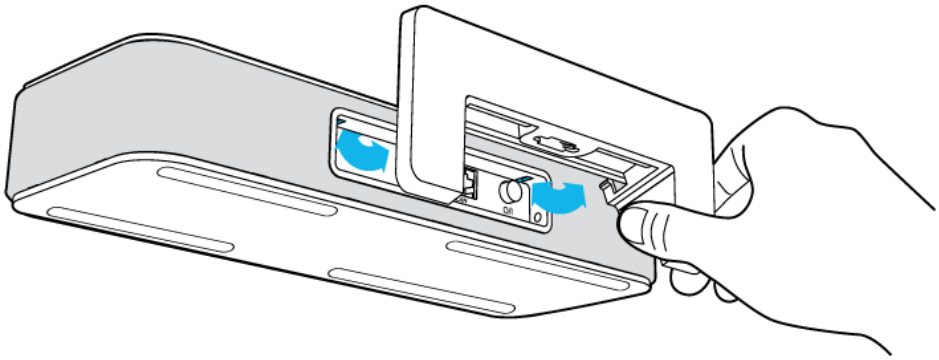

Important:

If you cannot push the power button or the bracket is not slanted, you did not install the bracket in the correct position. When removing the tablet bracket, grasp the bracket from the corners and gently rotate the bracket up and away from the media station. If you try to pull the tablet bracket straight out, you might damage the bracket.

2. Perform one of the following actions:
   - To install a tablet in a position where the USB cable power connector is pointing down into the bracket, route the USB cable through the tablet bracket and set the tablet on the bracket.
   - To install a tablet in a position where the USB power connector is not pointing down into the bracket, connect the USB cable of the device to the tablet and set the tablet in position on the bracket. This position is also useful if you plan to hold the tablet by hand on occasion.

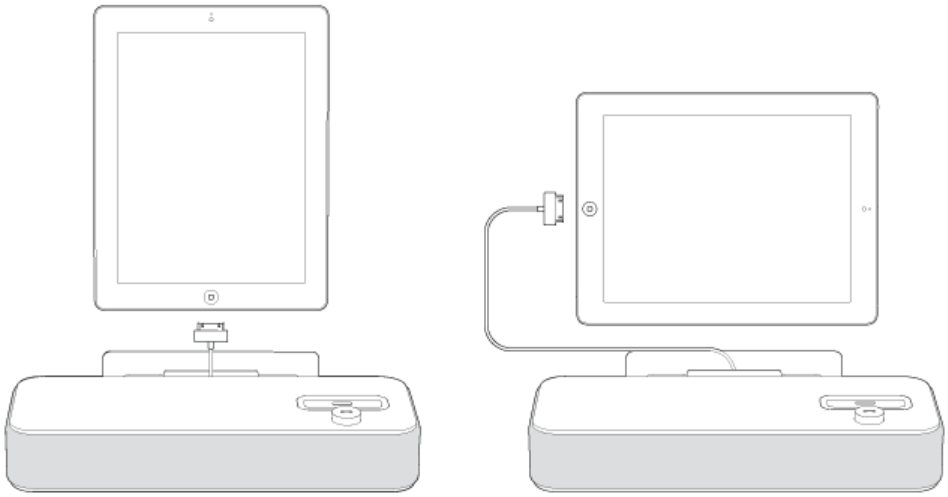

3. Plug the USB cable into the left USB port on the rear of the media station.

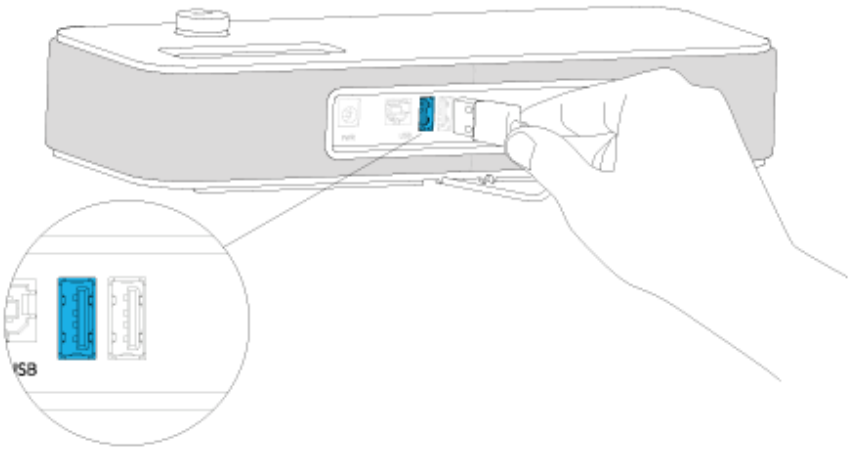

Connecting the handset

Procedure

1. Plug the handset cable into the right USB port on the rear of the media station. Route the cable through the channels under the media station.

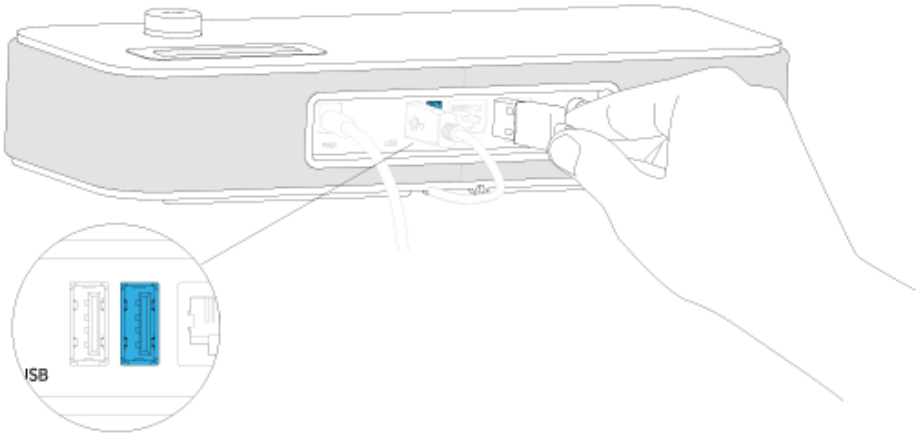

2. Put the handset cradle on top of the media station. Put the handset in the handset cradle. Position the cradle so that the magnets secure the holder on the media station.

   Note:

   If more convenient for you, you can put the handset cradle and handset on any location on your desk. Regardless of placement, the handset must rest in the handset cradle.

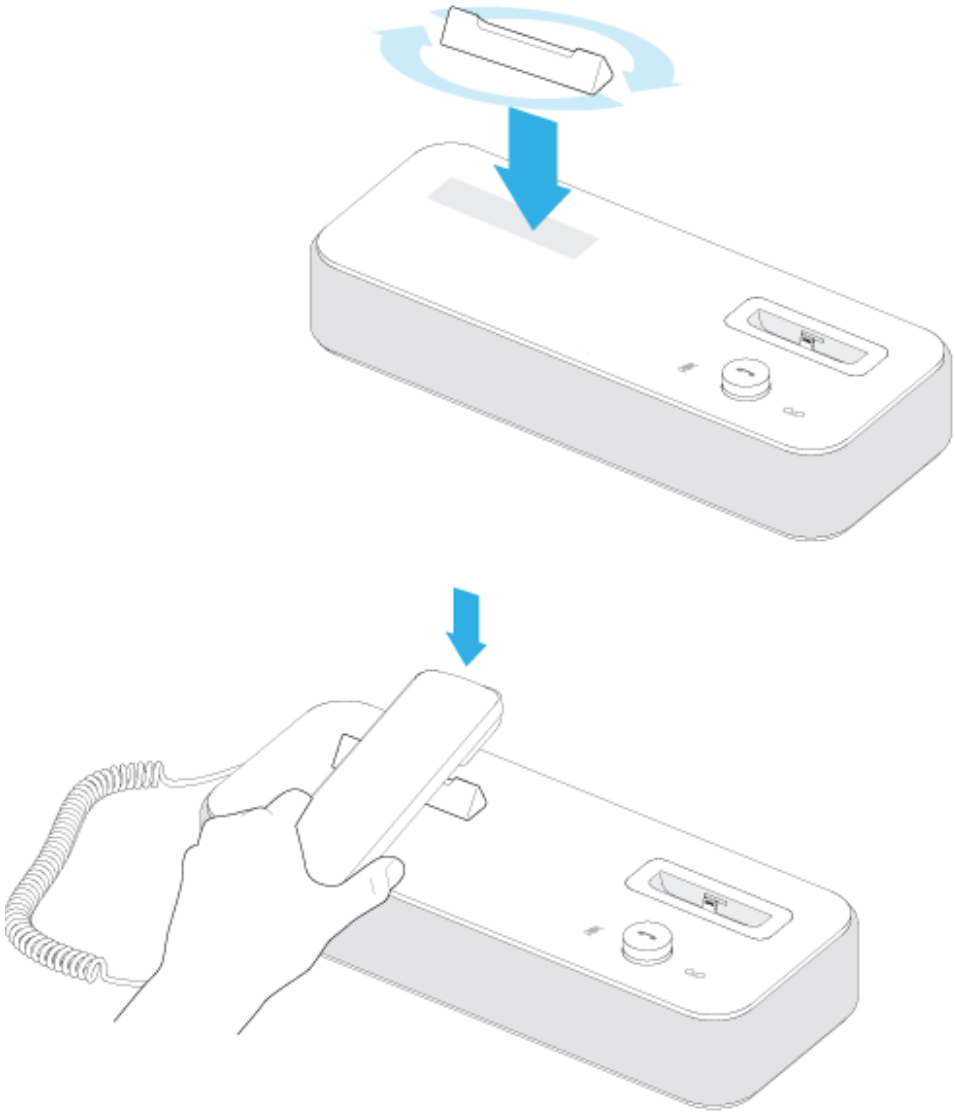

Important:

For the media station to recognize whether the handset is either on-hook or off-hook, you must use the handset cradle. If you misplace the handset cradle, you cannot use the handset and you must disconnect the handset until you get a new cradle. Contact Avaya support personnel to order a replacement cradle.

Connecting to your network

Before you begin

Get a CAT 5 Ethernet cable long enough to reach your Ethernet socket.

Procedure

1. Plug one end of an Ethernet cable into the LAN connector at the back of the media station. Plug the other end into the Ethernet network socket.

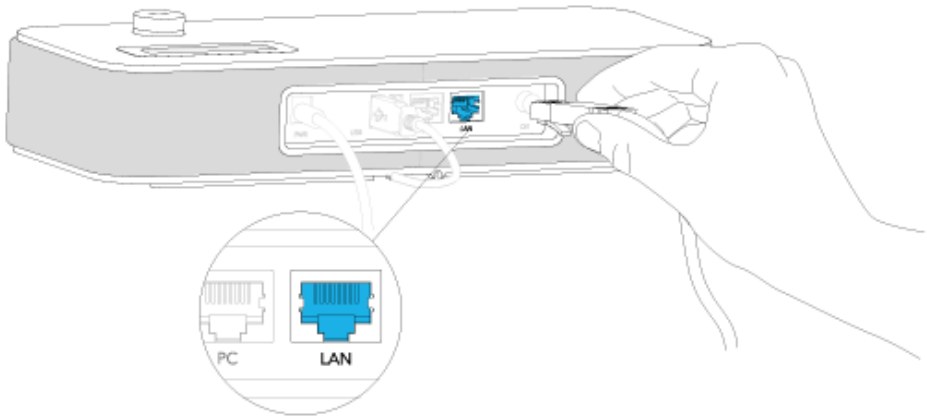

2. Optional. Plug one end of an Ethernet cable into the computer connector at the back of the media station. Plug the other end into the Ethernet connector on your PC. This connection provides a convenient way to connect your computer to your network.

Connecting to AC power

About this task

This task is optional.

Procedure

1. Connect the proper AC adapter plug type into the AC adapter.
2. Verify that the power button on the media station is in the off position before you plug in power.

3. Plug the AC power adapter into the AC input connector on the rear of the media station and into a wall mount socket.

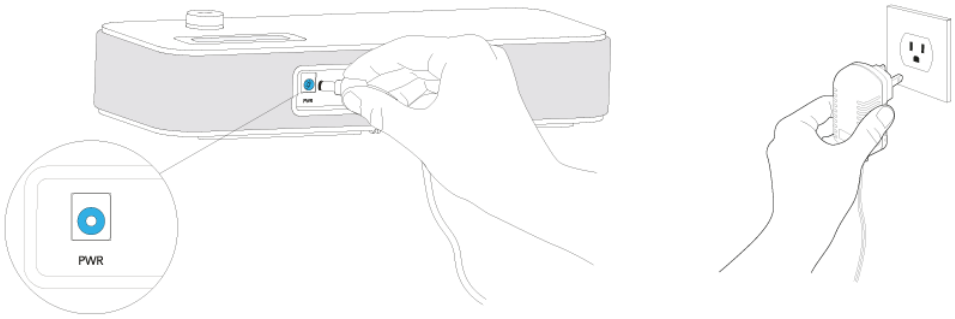

Next steps

Continue with Downloading the media station app on page 40.

Software installation

Downloading the media station app

You must download and install the media station app to fully support SIP line functionality on the media station. Other telephony applications can only use the media station as a Bluetooth speakerphone and cannot use the SIP capabilities of the Avaya telephony server.

To learn more about the app, go to the following websites:

- Apple App Store
- Google Play Store

Procedure

1. From your smart device, navigate to the Apple App Store or the Google Play Store.
2. Search for **avaya**.
3. Select the **Avaya Media Station** app.
4. Tap **FREE**.

   The icon changes to **INSTALL**.
5. Tap **INSTALL**.

   The media station app downloads and installs on your smart device.

Turning on the media station

Before you begin

- Assemble the media station and connect to the network. Connect to AC power if required.
- Download and install the Avaya E169 IP Media Station app.
- Verify administration of the SIP line with your system administrator.
- Connect your device to the media station.

Procedure

1. Turn on power to the media station.

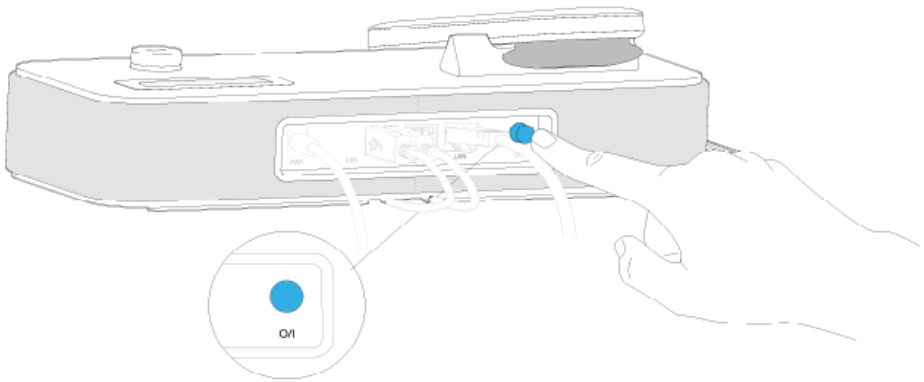

The following occurs when you apply power:

- The **Mute**, **Call/Volume**, and **Voice Mail** LEDs on the media station light up in that order, then go dark after a few seconds.
- You might get a “Trust this computer” query from your smart device. Accept the query.
- If you installed the app on a smart device and you connected the smart device to the media station with a USB cable, the app opens on the smart device.
- You might hear a beep and a pairing message from the media station.
- For an iOS device, the media station automatically attempts to pair using Bluetooth.
- For an Android device, you must initiate manual Bluetooth pairing.
- If not set on the handset cradle, the handset displays the message **Connecting**, followed by alternating displays of the current time and the SIP line telephone number.

2. If the media station app displays the message **Not Connected (Network)**, a network connection is not present. Troubleshoot the reason for no network connectivity. An **Offline (Disconnected)** message indicates that the account is not administered.

Connecting smart devices with Bluetooth pairing

Before you begin

Download and install the media station app as described in Downloading the media station app on page 40.

About this task

You must pair the smart device with the media station to create a logical connection with the media station app and the media station.

Connecting a smart device to the media station with Bluetooth is a one-time procedure. After pairing the first time, future connections happen automatically until you permanently remove the connection.

When you enable Bluetooth on the smart device, a connection occurs when the smart device is within range of the media station.

Apple iOS devices pair automatically with the media station when you connect using USB.

Android devices do not pair automatically with the media station when you connect using USB.

Important:

You can connect only one device at a time using Bluetooth.

Procedure

1. For an iOS device, perform the following actions:
   a. Enable Bluetooth on your smart device.
   b. Connect your device to the media station using either the dock on top of the media station or a USB cable.

      The media station beeps, plays the message “Pairing mode: connecting your device,” and the media station app opens. You hear a beep and the Bluetooth icon on the smart device shows an active connection.
2. On an Android device, perform the following actions:
   a. Put the media station into pairing mode by pressing and holding the **Call/Volume** button on the media station until you hear a single click.

      After you release the button, the media station plays the message “Pairing mode: waiting for connection.”
   b. Enable Bluetooth on your smart device.

      The smart device starts searching for the media station.
   c. When the smart device detects and displays the media station, tap the media station displayed on the smart device to initiate the pairing.

      You hear a beep and the Bluetooth icon on the smart device shows an active connection.

Connecting the media station to a smart device as a USB accessory

Before you begin

Download and install the media station app as described in Downloading the media station app on page 40.

About this task

Connecting the media station to a smart device as a USB accessory is a one-time procedure. On Android devices, you must administer options on the smart device to remember the media station. After connecting the first time, future connections happen automatically until you permanently remove the connection.

If you do not also pair the smart device using Bluetooth, you might lose the connection when you unplug the smart device from the media station.

Important:

You can connect only one device at a time using USB.

Procedure

1. On an iOS device, connect your device to the media station using either the dock on top of the media station or a USB cable.

   The media station app opens.

2. On an Android device, perform the following actions:

   a. Connect your device to the media station using either the dock on top of the media station or a USB cable.

      The smart device displays a dialog box asking if you want to remember the media station as a USB accessory.

   b. Tap the check box to remember the media station and tap **OK**.

      The smart device displays a dialog box asking if you want to open the media station app when connected to the media station.

   c. Tap the check box to always open the media station app and tap **OK**.

      The media station app opens.

Registering the media station app and signing in the first time

To make the app work with the media station, you must enter your credentials in the app to register with the media station. After you sign in the first time, subsequent use of the app only requires that you pair the device using Bluetooth. If you manually sign out from the app, you must manually sign in the next time you register the app with the media station.

Procedure

1. Open the media station app.
2. Tap **Settings** > **Account Setup** > **Add SIP Account**.
3. Enter the following user credentials as provided to you by your system administrator:
   - **Username**
   - **Password**
   - **Domain**, if requested
4. After entering the user credentials, tap **Sign In**.

   The smart device displays another **Sign In** option.
5. Tap **Sign In** again.

   The smart device displays the Settings screen.
6. Tap the smart device **Home** button.

   If sign in is successful, the app displays a green check mark. On some devices, the app also displays your telephone number and the status message **Available**. For devices that only show a green check mark, you can tap the check mark to display the account telephone number.

   Important:

   Before you make calls using the media station, ensure that the media station app is registered with the telephony server. The green check mark indicates that the media station app is registered.

Media station registration

When you sign in with the media station app, the media station remains logged on until one of the following happens:

- You sign out of the media station app and the media station unregistration timer expires, if administered.

  Important:

  Even if you sign out of the media station app, the media station continues to ring on incoming mobile cellular calls. The media station is also the default Bluetooth audio device for the smart device if the Bluetooth connection is active.
- Another Avaya app on the same smart device registers using the same extension.
- You turn off the media station.

When the system administrator does not administer automatic unregistration, the media station remains logged on even under the following conditions:

- The smart device is no longer docked with the media station.

- You turn off the smart device.
- The smart device is not within Bluetooth range of the media station.

When the system administrator does administer automatic unregistration, you can temporarily sign out and disconnect the app from your media station. The smart device saves your options and you can sign back in at anytime.

Important:

When you sign out of the app, emergency calling requires use of the USB handset. When you sign out from the app, the media station supports the same emergency call (for example, 911) capability as other Avaya SIP deskphones. The media station displays the emergency menu on the USB handset.

Chapter 5: Maintenance

Updating the media station app

Avaya releases regular updates to the media station app. Update the media station app when prompted by your smart device.

About this task

Depending on your smart device, some apps update automatically. Some smart devices require you to manually install the update. If your smart device automatically updates your apps, you do not need to perform any action. If you must manually update your apps, follow this procedure.

Procedure

1. From your smart device, navigate to the Apple App store or the Google Play store.
2. Search for **avaya**.
3. Select the **Avaya Media Station** app.
4. Tap **UPDATE**.

   The icon changes to **INSTALL**.
5. Tap **INSTALL**.

   The media station app downloads and installs on your smart device.

Updating the media station firmware

Avaya releases regular updates to the media station firmware. The telephony servers push firmware updates to the media stations by upgrade script files hosted on the telephony servers. You do not have to check for updates, but you can use this procedure to check for updates. If an update is available, you can reboot the media station and force an update.

Before you begin

Disconnect from any active calls before you update the media station firmware.

Procedure

1. Open the media station app.
2. Tap **Settings** > **Avaya Media Station**.

The app displays the media station options.

3. Under **FIRMWARE**, tap **Check Update**.

   The media station app checks for an update. If an update exists, the app displays the version number of the new firmware.

4. Cycle power on the media station.

   The app downloads and installs the new firmware to the media station.

Removing and replacing a cable sleeve

Use this procedure to remove and replace a cable sleeve when you change the smartphone you are using.

Before you begin

Disconnect your smartphone from the media station, turn off the media station, and disconnect all cables from the media station.

Procedure

1. Turn the media station upsidedown.
2. Bend the cable sleeve latch to release the cable sleeve from the media station base.
3. Push the cable sleeve out of the media station base.
4. Replace the cable sleeve and USB cable as shown in Connecting a smartphone on page 31.

Chapter 6: Troubleshooting

Frequently Asked Questions

In which direction must I put the cable sleeve in the slot?

To correctly attach your smartphone, you must insert the cable sleeve in the slot in the proper direction. Insert the cable sleeve with the cable cord hole facing the **Call/Volume** button. See the following diagram.

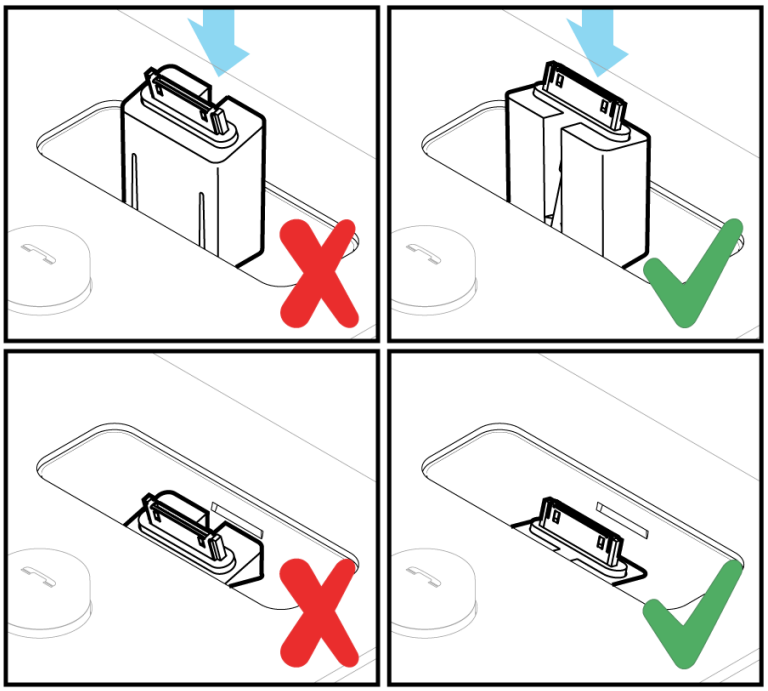

How do I reverse a cable sleeve if I inserted the sleeve the wrong way?

From the bottom of the media station, bend the cable sleeve latch and push the cable sleeve out of the media station. You might need to use a tool such as needle-nose pliers to push the cable sleeve out of the media station. Guide the cable sleeve out of the media station from the top of the media station. When the cable sleeve is out of the media station, turn the sleeve around 180° and reinsert the cable sleeve the proper way.

What smart devices are compatible with the media station?

See Product compatibility on page 11.

Does the media station operate over a wireless Internet connection?

No, the media station does not support wireless Internet connections.

How can I find my SIP user name and password?

Contact your Avaya telephony server administrator.

How do I make a Bluetooth connection?

See Connecting smart devices with Bluetooth pairing on page 42.

Must I use the media station handset?

No. If you do not install the handset, you must dial all calls using the media station app.

I lost my handset cradle. How can I get a new one?

Contact your system administrator. Your system administrator can order a replacement accessory kit that includes a handset cradle. You can also order replacement power adapters, handsets, and tablet brackets.

What type of headsets can I use with the media station?

See Product compatibility on page 11.

Can I receive a SIP call on my smartphone as if it came from the cellular network?

No, this operation is not possible.

Can I transfer a call on the media station to my mobile smartphone to continue the call?

No, this operation is not possible.

Can I manually transfer a cellular call on my mobile smartphone to the media station to continue the call?

No, this operation is not possible. However, if you are on a cellular call and you become within Bluetooth range of the media station, the audio automatically transfers from your call to the media station.

Why is there a computer Ethernet port?

The computer Ethernet port provides a convenient way to provide a switched Ethernet connection for your computer.

Can I listen to music that is on my smart device over the media station speakerphone?

Yes. See Listening to music from your device.

Can I connect the media station to the PC port on my 96x1 IP deskphone?

No, the PC port on a 96x1 IP deskphone does not provide a dedicated Ethernet connection. The media station requires a provisioned network connection using a physical Ethernet jack.

Can I pick up an active call on another Multiple Device Access (MDA) device from the media station?

No, this operation is not possible.

What options must I set on my USB headset?

Administer the USB softphone options to **Other**, not **Avaya**. You can also change other default options such as the mute tone and the incoming call ringing tone. Connect the USB headset to your PC and set these options before you connect the headset to the media station.

Will the media station app interfere with other Avaya telephone apps?

Remember the following product interactions when using the media station app with Avaya apps such as Avaya one-X® Mobile and Avaya Communicator:

- Avaya one-X® Mobile and Avaya Communicator do not have native support for managing the media station. The apps can use the media station as a Bluetooth speakerphone.
- In the speakerphone mode, the media station operates as any other Bluetooth speakerphone.
- The calls are not handled over the SIP line, but the wireless carrier of the smartphone.
- Audio quality might be poorer because the call is not routed over the SIP line.

Removing Bluetooth connections and subscriptions

About this task

You can remove a Bluetooth connection in either of the following ways:

- Using the media station app (iOS only)
- Using the media station **Call/Volume** button

You can remove a Bluetooth subscription in either of the following ways:

- Using the media station **Call/Volume** button
- Using the smart device **Settings** menu.

If you are having problems getting a smart device to connect with the media station, remove the connection before trying to connect again.

Depending on how you remove the Bluetooth connection, you might have to use your smart device Bluetooth menu to disconnect the media station.

Procedure

Removing connections

1. Using the media station app (iOS only), perform the following actions:
   a. Select **Settings** > **Bluetooth**.
   b. Confirm that the status shows **paired**.
   c. Tap **Disconnect**.

      The system removes the Bluetooth connection.

Note:

If you remove the connection using the media station app menu, you must disconnect and reconnect the cable because the pairing does not happen automatically. You must go to **Settings** > **Bluetooth** and tap **Start Pairing**.

2. Using the media station **Call/Volume** button, press and hold the **Call/Volume** button until you hear two clicks.

   The media station plays the message “Disconnecting,” followed by a high-to-low tone sound.

Removing subscriptions

3. Using the media station **Call/Volume** button, press and hold the **Call/Volume** button until you hear three clicks.

   The media station plays the message “Clearing all subscriptions.”

4. Using the smart device, perform the following actions:

   a. Select **Settings** > **Bluetooth**.

   b. Tap the **Info** icon.

   c. Tap **Forget this Device**.

   The system removes the Bluetooth subscription.

Reverting the media station to the previous version of firmware

About this task

Use this task to revert the media station to the previous version of firmware. Do this only when directed by support personnel to troubleshoot problems with the media station.

Procedure

1. Turn off the media station.
2. Press and hold the **Call/Volume** button.
3. Turn on the media station.
4. When the **Mute** icon flashes, release the **Call/Volume** button.
5. Turn the **Call/Volume** button about three clicks to the right.

   Verify that the **Mute** icon is flashing one time for every three flashes of the **Voice Mail** icon.

6. If the **Voice Mail** icon is not flashing three times, turn the **Call/Volume** button to the right or left until the **Voice Mail** icon flashes three times for every one time that the **Mute** icon flashes.
7. Push the **Call/Volume** button one time.

The media station restarts with the previous version of firmware.

Resetting the media station to factory defaults

About this task

Use this task to reset the media station to the factory defaults. Do this only when directed by support personnel to troubleshoot problems with the media station.

To reset the media station to factory defaults, you can perform one of the following procedures:

- Use an option on the media station app. Try this method first.
- Perform a series of button pushes on the media station hardware. Use this method only if the media station app is not working or cannot reset the media station.

Caution:

When you reset the media station to factory defaults, you lose all your SIP account settings. You must readminister your account settings after the media station resets.

Procedure

1. Perform the following actions to reset your media station using the media station app:
   a. Open **Settings** > **Avaya Media Station**.
   b. Tap **Factory Defaults**.

      The app displays a message asking whether you want to restore your media station to factory defaults.
   c. Tap **Yes** to start the reset. Tap **No** to cancel the reset.
2. Perform the following actions to reset your media station using button pushes on the media station:
   a. Turn off the media station.
   b. Press and hold the **Call/Volume** button.
   c. Turn on the media station.
   d. When the **Mute** icon flashes, release the **Call/Volume** button.
   e. Turn the **Call/Volume** button about one click to the right.

      Verify that the **Mute** and **Voice Mail** icons are flashing one time each. If the **Voice Mail** icon is flashing more than once, turn the **Call/Volume** button counter to the right or left until you see the **Voice Mail** icon flash one time.
   f. Push the **Call/Volume** button one time.

      The media station resets to factory defaults.

Next steps

Readminister your account settings as described in Registering the media station app and signing in the first time on page 43.

The media station app displays the Not Connected (Network) message

Error code `Not Connected (Network)`

Problem description

The media station is disconnected from the network.

Related Links

Resolving a Not Connected (Network) message on page 53

Resolving a Not Connected (Network) message

Procedure

1. Restart your smart device.
2. Turn the media station power off and on.
3. If the condition persists, open the media station app.
4. Open **Settings** > **Avaya Media Station** > **Network**.
5. Confirm that the media station has an IP address. If the app does not display an IP address, you might have to reset the media station to factory defaults. Contact your system administrator for support.

Related Links

The media station app displays the Not Connected (Network) message on page 53

Index

A

AC power 12
administration 16
administration overview 15
alternative provisioning URL 24
Android Beta program 11
Avaya Aura administration 16

B

Bluetooth pairing 42
button descriptions 30

C

codecs 14
compatibility 11
connecting
    tablet 35
connecting power to the media station 39
connecting smart devices 42, 43
connecting the handset 37
connecting the media station 31
connecting your network to the media station 38
connectivity 12

D

dialing plan 17
dimensions 12
documentation 6
downloading apps 40

E

environmental specifications 12
Ethernet connections 12

F

factory defaults 52
FAQs 48
features 8

H

handset, connecting 37
headset compatibility 11
headset connections 12

I

interoperability 11
IP Office administration 16

L

line protocol 12

M

Made for Apple program 11
media station, connecting 31
media station, connecting power 39
media station, connecting to your network 38
media station, preparing 29
media station buttons 30
media station overview 8

N

narrowband 14
Not Connected (Network) 53
Not Connected (Network) message 53

P

parameter definitions 25
port matrix 13
positioning media station 31
power up 41
preparing the media station 29
previous version of firmware 51
provisioning group 24

R

rear panel connectors 30
rear panel controls 30
registering a device 43
registration 44
remove cable sleeve 47
removing Bluetooth connection 50
replace cable sleeve 47
resetting the media station 52
reverting the media station 51

S

setting registration parameters 43
settings file 20

signing in 44
signing out 44
specifications 12
support 7

T

tablet, connecting 35

U

updating
    media station app 46
    media station firmware 46
upgrade script file 20
USB accessory 43
USB connections 12

V

videos 7

W

weight 12
wideband 14